Full Bore, 2-Piece Body, Blowout-proof Stem, Screwed Ends.

MSS Specification Valve

FEATURE

1. Suitable Medium : Water, Sea Water, Non-causticity liquid, Saturated Steam
2. Max.Working Pressure : 600 PSI
3. Max.Temperature : -10° to 100°C
4. Thread : BS 21

WORKING PRESSURE			TEST	
Saturated Steam		Cold Water, Oil, Gas	Shell (Water)	Seat (Air)
Psi	150	600	900	80
Bar	10.3	41.4	62.1	5.5

Size 1/4" - 3" : Working Pressures 600 PSI.

BALL VALVE
Fig. BV-600L



600 W.O.G

MATERIALS

NO.	NAME OF PARTS	MATERIAL	ASTM SPECIFICATIONS
1	Body	Forged Brass	B283-C37700
2	Seat	PTFE	
3	Stem	Forged Brass	B124-C37700
4	Handle	Steel Zinc plated	A307 Gr.A
5	Handle Nut*	Stainless Steel	A167-304
6	Gland	Forged Brass	B124-C37700
7	Packing	PTFE	
8	Ball	Forged Brass (Hand Chromuim plated)	B283-C37700
9	Cap	Forged Brass	B283-C37700

* Handle Nut : Size : 1/4" - 2" Stainless Steel, 2.1/2" - 3" Forged Brass

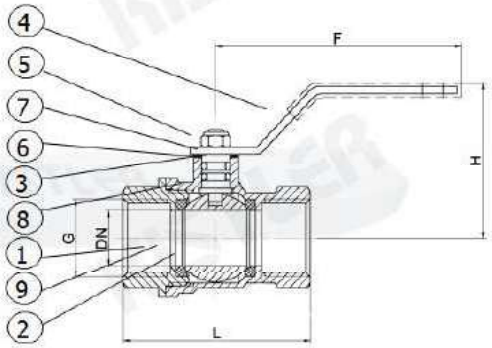

Note :

1. End threads conform to the British standard Taper pipe threads.
2. Each valve is individually tested for seat and shell tigthess.
3. Minimum and maximum working temperature -10° to 100°C
4. The following accessories are available upon request.
   - Memory stop , - Extension stem , - Special handle
5. These valve conform to the requirements of MSS SP-110

Application :

Suitable for water services, heating and air-conditioning plants, compressed air systems.

DIMENSIONS

Unit : mm.

SIZE	DN	L	H	F	Weight / kgs
1/4"	8	41	38	82	0.11
3/8"	10	45	43	82	0.12
1/2"	15	51	50	88	0.19
3/4"	20	57	57	99	0.25
1"	25	68	62	109	0.42
1.1/4"	32	80	78	116	0.69
1.1/2"	40	89	100	160	0.90
2"	50	100	103	160	1.35
2.1/2"	65	124	130	245	2.6
3"	80	141	141	245	3.6

* Design, Dimensions and Materials are subject to change without notice. Copyright 2018 by APC INTERTRADE CO.,LTD.

Non-Rising Stem, Screwed Bonnet, Solid Wedge Disc, Screwed Ends. MSS Specification Valve

FEATURE

1. Suitable Medium : Water, Sea Water, Non-causticity liquid, Saturated Steam
2. Max.Working Pressure : 200 PSI
3. Max.Temperature : -10° to 100°C
4. Thread : BS 21

GATE VALVE
Fig. GV-1101 (Full Bore)



200 W.O.G

WORKING PRESSURE			TEST	
Saturated Steam		Cold Water, Oil, Gas	Shell (Water)	Seat (Air)
Psi	125	200	300	80
Bar	10.3	13.8	20.7	5.5

MATERIALS

NO.	NAME OF PARTS	MATERIAL	ASTM SPECIFICATIONS
1	Body	Forged Brass	B283-C37700
2	Wedge	Forged Brass	B283-C37700
3	Stem	Forged Brass	B124-C37700
4	Washer	PTFE	
5	Bonnet	Forged Brass	B283-C37700
6	Screw	Forged Brass	B283-C37700
7	Packing	PTFE	
8	Gland	Forged Brass	B124-C37700
9	Hex Nut	Forged Brass	B21-C37700
10	Hand Wheel	Cast Iron	A126 Class B
11	Name Plate	Aluminium plate	B209-1000
12	Wheel Nut	Steel (Zine plated)	A307 Gr.A

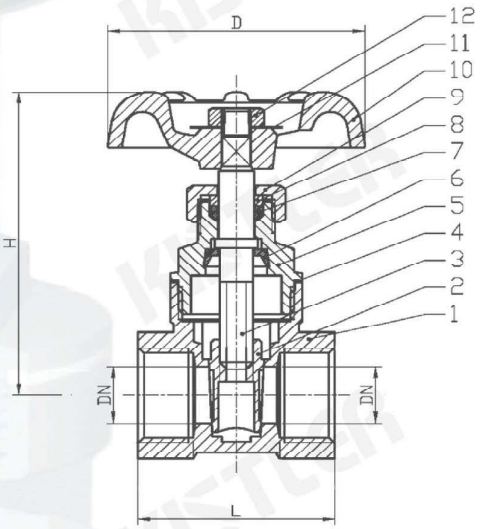

Note :

1. End threads conform to the British standard Taper pipe threads.
2. Each valve is individually tested for seat and shell tigthess.
3. Minimum and maximum working temperature -10° to 100°C
4. These valve conform to the requirements of MSS SP-110

DIMENSIONS

Unit : mm.

SIZE	DN	H	D	L	Weight / kgs
1/2"	15	66	53	41	0.24
3/4"	20	75	53	46	0.28
1"	25	81	59	48	0.39
1.1/4"	32	91	72	57	0.61
1.1/2"	40	103	72	64	0.8
2"	50	129	79	65	1.15
2.1/2"	65	170	99	79	2.3
3"	80	180	107	83	2.75

* Design, Dimensions and Materials are subject to change without notice. Copyright 2018 by APC INTERTRADE CO.,LTD.

FEATURE

MSS Specification Valve

1. Suitable Medium : Water, Sea Water, Non-causticity liquid, Saturated Steam
2. Max.Working Pressure : 200 PSI
3. Max.Temperature : -10° to 100°C
4. Thread : BS 21

Standaed production : 50 Mesh

WORKING PRESSURE			TEST
Saturated Steam		Cold Water, Oil, Gas	Shell (Water)
Psi	125	200	300
Bar	10.3	13.8	20.7

Y-STRAINER
Fig. YST-5002



200 W.O.G

*Standard Production Screen : 50 Mesh

MATERIALS

NO.	NAME OF PARTS	MATERIAL	ASTM SPECIFICATIONS
1	Body	Forged Brass	B283-C37700
2	Screen	SUS304	A167-304
3	Gasket	Non-asbestos	
4	Cap	Forged Brass	B283-C37700

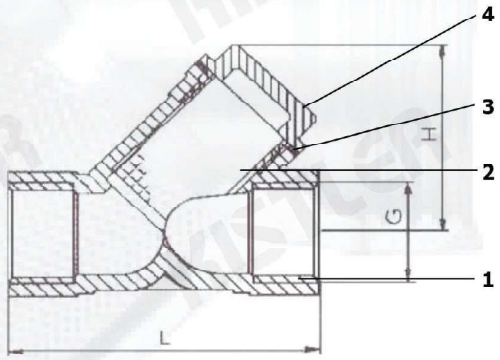

Note :

1. End threads conform to the British standard Taper pipe threads.
2. Each valve is individually tested for seat and shell tigthess.
3. Minimum and maximum working temperature -10° to 100°C
4. These valve conform to the requirements of MSS SP-110

DIMENSIONS

Unit : mm.

SIZE	DN	L	H	Weight / kgs
1/2"	15	54	39	0.12
3/4"	20	69	50	0.20
1"	25	79	64	0.3
1.1/4"	32	90	71	0.58
1.1/2"	40	108	80	0.8
2"	50	123	94	1.12
2.1/2"	65	134	107	1.95

* Design, Dimensions and Materials are subject to change without notice. Copyright 2018 by APC INTERTRADE CO.,LTD.

FEATURE

MSS Specification Valve

1. Suitable Medium : Water, Sea Water, Non-causticity liquid, Saturated Steam
2. Max.Working Pressure : 200 PSI
3. Max.Temperature : -10° to 100°C
4. Thread : BS 21

SWING CHECK VALVE

Fig. SCV-1001

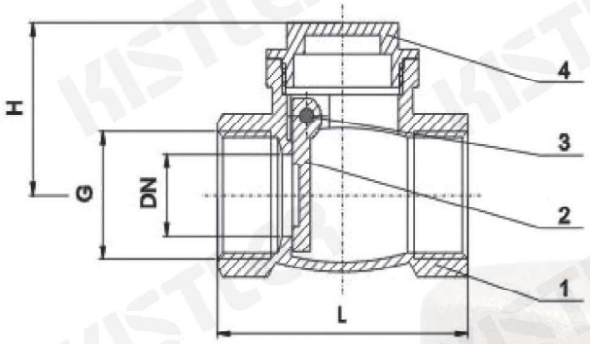

200 W.O.G



MATERIALS

NO.	NAME OF PARTS	MATERIAL	ASTM SPECIFICATIONS
1	Body	Forged Brass	B283-C37700
2	Wedge Disc	Forged Brass	B283-C37700
3	Pin	Forged Brass	B283-C37700
4	Bonnet	Forged Brass	B283-C37700

WORKING PRESSURE			TEST	
Saturated Steam		Cold Water, Oil, Gas	Shell (Water)	Seat (Air)
Psi	125	200	300	80
Bar	10.3	13.8	20.7	5.5

Note :

1. End threads conform to the British standard Taper pipe threads.
2. Each valve is individually tested for seat and shell tigthess.
3. Minimum and maximum working temperature -10° to 100°C
4. These valve conform to the requirements of MSS SP-110

DIMENSIONS

Unit : mm.

SIZE	G	DN	L	H	Weight / kgs
1/2"	15	12.5	66	53	0.18
3/4"	20	16.5	75	53	0.23
1"	25	20.5	81	59	0.37
1.1/4"	32	27	91	72	0.37
1.1/2"	40	33	72	52	0.51
2"	50	43	82	62	1.13
2.1/2"	65	57	120	80	2

* Design, Dimensions and Materials are subject to change without notice. Copyright 2019 by APC INTERTRADE CO.,LTD.

FEATURE

MSS Specification Valve

1. Suitable Medium : Water, Sea Water, Non-causticity liquid, Saturated Steam
2. Max.Working Pressure : 200 PSI
3. Max.Temperature : -10° to 100°C
4. Thread : BS 21

SPRING CHECK VALVE

Fig. CVSP-1002

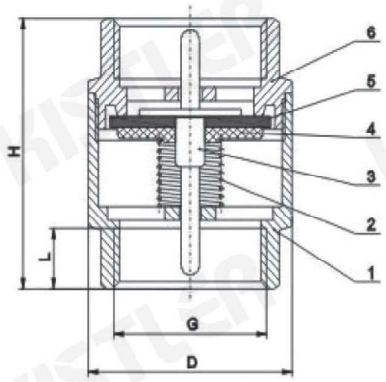

200 W.O.G



MATERIALS

NO.	NAME OF PARTS	MATERIAL	ASTM SPECIFICATIONS
1	Body	Forged Brass	B283-C37700
2	Spring	SUS304	A167-304
3	Piston	Forged Brass	B283-C37700
4	Disc	Forged Brass	B283-C37700
5	Seal Gasket	EPDM	
6	Bonnet	Forged Brass	B283-C37700

WORKING PRESSURE			TEST	
Saturated Steam		Cold Water, Oil, Gas	Shell (Water)	Seat (Air)
Psi	125	200	300	80
Bar	10.3	13.8	20.7	5.5

Note :

1. End threads conform to the British standard Taper pipe threads.
2. Each valve is individually tested for seat and shell tigthess.
3. Minimum and maximum working temperature -10° to 100°C
4. These valve conform to the requirements of MSS SP-110

DIMENSIONS

Unit : mm.

SIZE	G	D	L	H	Weight / kgs
1/2"	20	34	11.5	45	0.14
3/4"	25	43	14.3	49	0.27
1"	31	41	13.7	69	0.28
1.1/4"	40	59	14.5	62	0.33
1.1/2"	45	68	16.3	66	0.53
2"	57	86	20.2	101	1.3
2.1/2"	72	115	25.3	116	2.8
3"	85	129	23.1	131	4
4"	110	149	29.0	153	4

* Design, Dimensions and Materials are subject to change without notice. Copyright 2018 by APC INTERTRADE CO.,LTD.

MSS Specification Valve

FEATURE

1. Suitable Medium : Water, Sea Water, Non-causticity liquid, Saturated Steam
2. Max.Working Pressure : 200 PSI
3. Max.Temperature : -10^0 to 100^{0}C
4. Thread : BS 21

FOOT VALVE

Fig. FV-1010

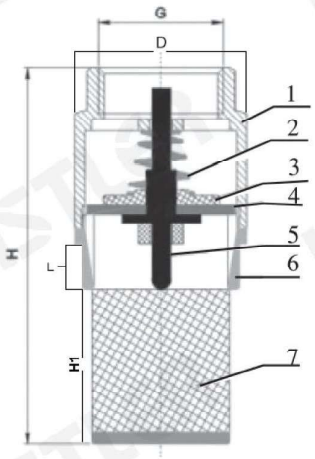

200 W.O.G



MATERIALS

NO.	NAME OF PARTS	MATERIAL	ASTM SPECIFICATIONS
1	Body	Forged Brass	B283-C37700
2	Spring	SUS304	A167-304
3	Disc	Forged Brass	B283-C37700
4	Seal Gasket	EPDM	
5	Piston	Forged Brass	B283-C37700
6	Bonnet	Forged Brass	B283-C37700
7	Strainer	SUS304	A167-304

WORKING PRESSURE			TEST	
Saturated Steam		Cold Water, Oil, Gas	Shell (Water)	Seat (Air)
Psi	125	200	300	80
Bar	10.3	13.8	20.7	5.5

Note :

1. End threads conform to the British standard Taper pipe threads.
2. Each valve is individually tested for seat and shell tigthess.
3. Minimum and maximum working temperature -10^0 to 100^{0}C
4. These valve conform to the requirements of MSS SP-110

DIMENSIONS

Unit : mm.

SIZE	G	D	L	H	H1	Weight / kgs
1/2"	15	33.5	11.5	74.5	30	0.15
3/4"	20	38.8	14.3	87.6	36	0.27
1"	25	45.4	13.7	102.3	46	0.28
1.1/4"	32	58.6	14.5	112	51	0.35
1.1/2"	40	61.6	16.3	126.3	58	0.56
2"	50	81.6	20.2	150.5	70	1.34
2.1/2"	65	98.4	25.3	177	76	2.9
3"	80	111.0	23.1	205	92	4.1
4"	100	144.5	25.0	223	120	4.25

* Design, Dimensions and Materials are subject to change without notice. Copyright 2018 by APC INTERTRADE CO.,LTD.

KISTLER®

INDUSTRIAL VALVES

MINI BALL VALVE

Brass Valve

MINI BALL BALVE

FEATURES

1. Nominal Pressure : 200 psi
2. Working Medium : Water, Gas
3. Working Pressure (Saturated Steam) : 125 psi
4. Thread : BSTP BS21

*End threads conform to the British standard Taper pipe threads.

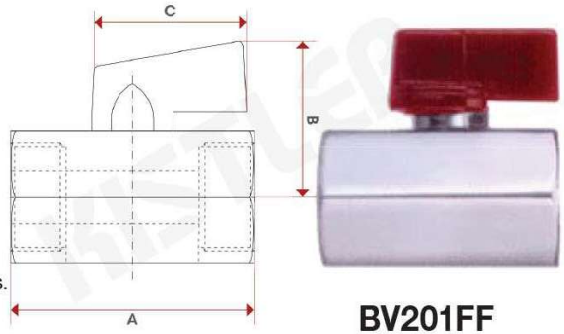

BV201FF

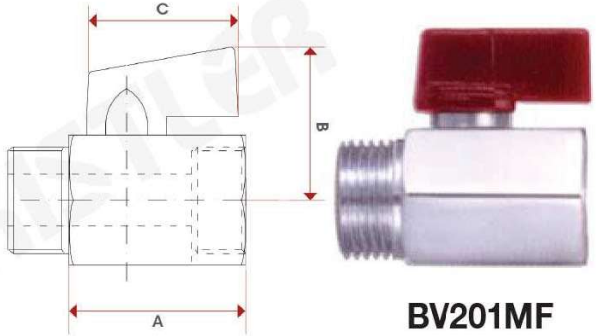

BV201MF

MATERIALS

NO.	NAME OF PARTS	MATERIAL
1	Body	Forged Brass + Cr Plating
2	Stem	Brass
3	Seat	PTFE
4	Ball	Brass + Cr Plating
5	Handle	Aluminum + Epoxy Coaing

DIMENSIONS

Unit : mm.

Model	Size	D	C	A	B
BV201FF	1/2”	10	30	44	29
BV201MF	1/2”	10	30	34	29

* Design, Dimensions and Materials are subject to change without notice. Copyright 2018 by APC INTERTRADE CO.,LTD.

Fig. SRV

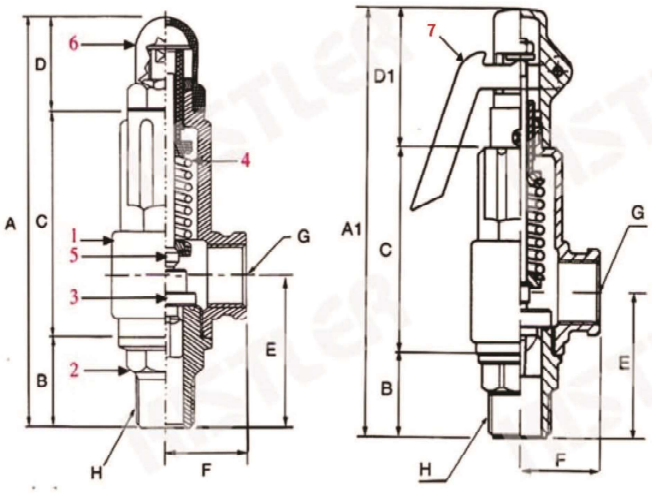

Fig. SRV-L



APPLICATION

- For General and Industrial Services
- Applicable Medium : Water, Gas, Steam, Vapour & liquid
- Max working pressure : 20 kgf/cm²
- Max working temperature : 45°C - 185°C

FEATURE

- Screwed end BSPT Connections
- Full Port
- Screwed Body Cap
- Spring Loaded

TESTING PRESSURE

- Hydrostatic
- Shell test 15 kgf/cm²
- Seat test at set pressure
- Air test 6 kgf/cm²

DESCRIPTION

- Direct Acting Safety Valve, Spring loaded, with Full bore & high capacity performance valve hoosing si heavy duty casting, wilde hex on valve body provides clearance for easy installation.
- Every valve is 100% tested/inspected fot pressure setting, blowdown and leakage.

MATERIALS

NO.	NAME OF PARTS	SPECIFICATION	
		SRV	SRV-L
1	Body	ASTM - C84400 (Bronze) / (Brass)	
2	Seat	ASTM - C84400 (Bronze) / (Brass)	
3	Disc	ASTM - C84400 (Bronze) / (Brass)	
4	Spring	Steel / Stainless Steel	
5	Stem	ASTM - C84400 (Bronze) / (Brass)	
6	Cap	ASTM - C84400 (Bronze) / (Brass)	
7	Lever	Stainless Steel	

PERFORMANCE

	SRV	SRV-L
Working Pressure	0.3 - 20 kg/cm²	
Working Temperature	-45C - 185°C	
Working Fluid	Non corrosive Gas, Steam, Air Water, Non corrosve Liquid	Non corrosive Gas, Steam, Air

DIMENSIONS

Unit : mm.

SIZE	A	B	C	D	E	F	G	H	LIFT	A1	D1
1/2"	137	31	73	33	52	29	1/2"	1/2"	0.52	160	56
3/4"	148	33	82	33	56	34	3/4"	3/4"	0.76	171	56
1"	183	40	98	45	72	40	1"	1"	1	205	67
1.1/4"	208	50	110	48	86	50	1.1/4"	1.1/4"	1.28	227	67
1.1/2"	230	50	130	50	93	57	1.1/2"	1.1/2"	1.52	248	67
2"	262	55	150	57	102	66	2"	2"	2	287	82

* Design, Dimensions and Materials are subject to change without notice. Copyright 2017 by APC INTERTRADE CO.,LTD.

KISTLER®

KLA-100 SRERIES

ALUMINUM ALLOY BUTTERFLY VALVES











THE BEST QUALITY PRODUCTS WITH NEW INNOVATIONS

Design and Features

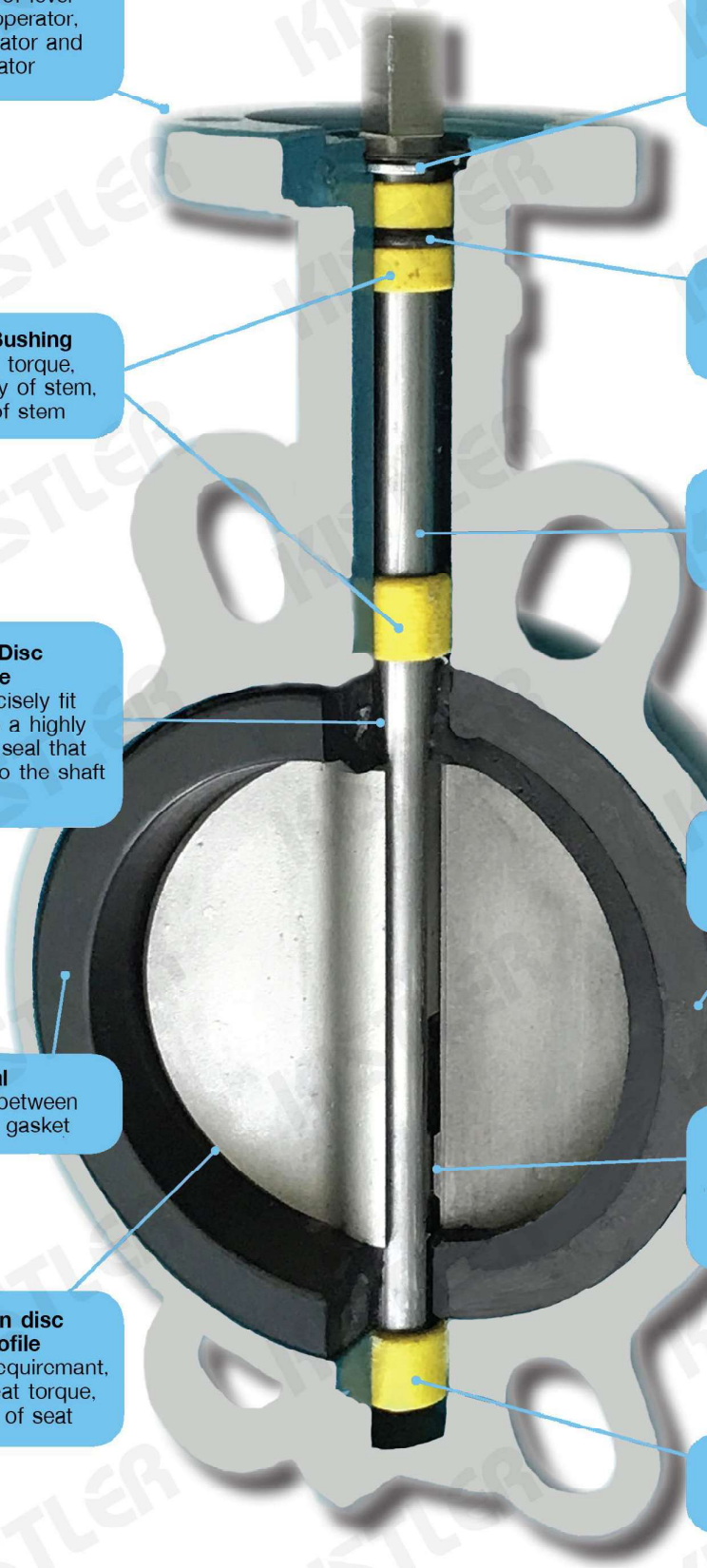

ISO 5211 Top Flange
Easy mounting of lever operator, gear operator, pueumatric actuator and eletric actuator

Retaining System
Shaft is retained in the body with a retaining, thrust washer and C clip, providing "blow-out proof" shaft assembly

Upper Stem Seal
Protect against external ingress and secondary seal for internal fluid

Upper Stem Bushing
Reduce driving torque, maintain centricity of stem, reduce wear of stem

One-Piece Shaft
One-piece through shaft ensures dependable and positive disc control

Surface of Disc Axle Hole
Polished to precisely fit with seat to give a highly efficient primary seal that prevents leakage to the shaft area

Cartridge Seat
Non collapsible, strech resistant and leakage proof, Easy field replaceable

Side Seal
To be clamped between flanges without gasket

Disc / Shaft Connection
The precise flat connection eliminates shaft "free play" and prevent exposure to line media with minimun pressure loss

High precision disc external profile
Meet bubic tight requirement, low break and seat torque, long usage life of seat

Lower Stem Bushing
Prevent distortion of stem, eliminate leakage in stem

* Design, Dimensions and Materials are subject to change without notice. Copyright 2021 by APC INTERTRADE CO.,LTD.

Aluminum alloy light weight wafer body



KLA-100L



KLA-100G



KLA-EA



KLA-PA

Design

KLA-100 butterfly valve has a through shaft without pin design meant for more demanding and higher frequency operation.
It has wafer pattern body and can be used for shut off as well as throttling application with its resilient cartridge type seat design. It is able to provide shut off pressure of up to 16 bar. The unique cartridge seat design also offers easy seat replacement on site without the need of any special too. The valve can be easily installed between flanges with no gasket required. The valve can be manually operated by lever, gear or retrofitted to pneumatic and clcctric actuator for automatic proccss control with its top flange dimension in accordance to ISO5211.

The Technical requirements

1. Design and manufacture according to GB/T12238-89 standard technical requirements.
2. Top flange size according to ISO5211 and GB/T12223 standard.
3. Flange link size in line with GB/T9119-2000 standard.
4. Medium : Water, Steam, Oil, Slurry, Dust, Etc.

Features

1. Simple structure, novel and unique shape desing. The font is clear, the surface is smooth, and the valve body is treated with eproxy spray.
2. Light torsion, light weight, diverse colors, easy to transport and install. (For example, the distribution pneumatic actuator can choose the small first gear).
3. The top flange adopts ISO5211 and GB/T12223 double working postion to install the no-tranfer disc.
4. The valve stem is precision machined to ensure concentricity and with anti-flying groove to prevent the stem from flying out.
5. Butterfly valve adopts pin free shatf plate to connect rotation and two-way butterfly valve installtion to provide reliability for easy installation.
6. Seat design provides complete separation of the valve body and stem from the medium, bearing up to 18kg of pressure without leakage.
7. Site maintenance to provide convenience, take down the damaged valve seat. Replace the new valve seat and use it.
8. The valve body adopts high pressure standard aluminum alloy die-casting, fast delivery, not affected by enviromental protection, anti-condensation, no deformation to the clamping pressure of 60 tons.

* Design, Dimensions and Materials are subject to change without notice. Copyright 2021 BY ABC INTERTRADE CO.,LTD.

KLA-100 SERIES ALUMINUM ALLOY BUTTERFLY VALVE
Through Shaft Without Pin

PERFORMANCE

NOMINAL DIAMETER		1.1/2" - 12" (40 - 300mm)
Nominal pressure (Mpa)		1.6
Test pressure (Mpa)	Shell	2.4
	Seat	1.76
Applicable temperature		-10°C - 120°C
Operating mode		Lever, Worm gear, Pneumatic, Electric actuator
Connecting		Universal Flange (5K, 10K, ANSI150, PN10, PN16)

STANDARD MATERIALS OF MAIN PARTS :

NO.	PART	MATERIAL
1	Body	Aluminum Alloy Die-cast (ADC12)
2	Disc	Stainless Steel 316 (CF8M)
3	Seat	EPDM, NBR
4	Stem	Stainless Steel (410)
5	Bushing	PTFE
6	O-ring	EPDM
7	Bolt	Staniless Steel

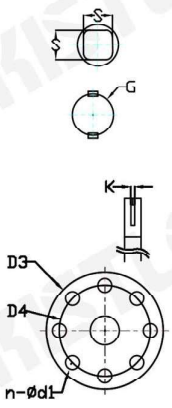

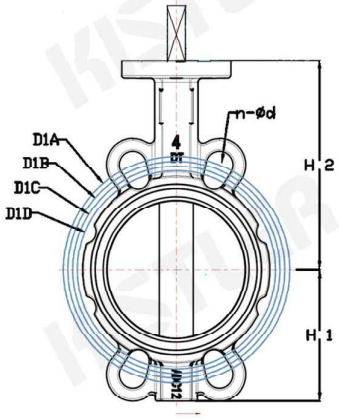

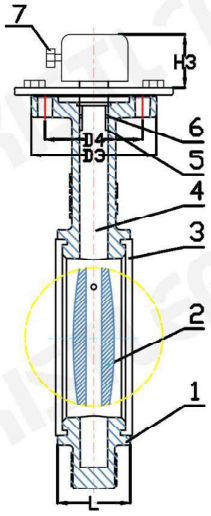

DN	INCH	L	H1	H2	H3	H4	S*S/G	K	D3	D4	n-Od1
40	1.1/2"	34	56	96	12	26	9*9/12.6	3	72	50/57	8-7
50	2"	43	72	133	12	26	9*9/12.6	3	70	50/57	8-7
65	2.1/2"	46	86	142	12	26	9*9/12.6	3	70	50/57	8-7
80	3"	46	95	149	12	26	9*9/12.6	3	70	50/57	8-7
100	4"	52	108	173	15	28	11*11/15.8	5	90	70/70	8-10
125	5"	56	125	182	18	28	14*14/18.9	5	90	70/70	8-10
150	6"	56	139	199	18	28	14*14/18.9	5	90	70/70	8-10
200	8"	60	170	238	21	35	17*17/22.1	5	125	102/89	4-12/14
250	10"	68	207	283	26	40	22*22/28.45	8	125	102/89	4-12/14
300	12"	78	236	309	26	40	22*22/31.6	8	140	102/108	4-12/14

DN	INCH	150LB	10K	5K	PN16	PN10	150LB	10K	5K	PN16	PN10
		D1A	D1A	D1D	D1B	D1C	n-Od1	n-Od1	n-Od1	n-Od1	n-Od1
40	1.1/2"	98.4	105	90	110	110	4-19	4-16	4-12	4-18	4-18
50	2"	120.7	120	105	125	125	4-19	4-16	4-15	4-18	4-18
65	2.1/2"	139.7	140	130	145	145	4-19	4-16	4-15	8-18	8-18
80	3"	152.4	150	145	160	160	4-19	8-16	4-19	8-18	8-18
100	4"	190.5	175	165	180	180	8-19	8-16	8-19	8-18	8-18
125	5"	215.9	210	200	210	210	8-22	8-20	8-19	8-18	8-18
150	6"	241.3	240	230	240	240	8-22	8-20	8-19	8-22	8-22
200	8"	298.5	290	280	295	295	8-22	12-20	8-23	12-22	8-22
250	10"	362	355	345	355	350	12-26	12-22	12-23	12-26	12-22
300	12"	413.8	400	390	410	400	12-26	16-22	12-23	12-26	12-22

* Design, Dimensions and Materials are subject to change without notice. Copyright 2021 BY APG INTERTRADE CO.,LTD.

KLA-100 SERIES ALUMINUM ALLOY BUTTERFLY VALVE
Through Shaft Without Pin

Pneumatic and Electric Actuated Version



Design

KLA-100 Series butterfly valve when retrofitted with pneumatic or electric actuator make it suitable for automatic process control application

Pneumatic actuator is available in double acting (DA) or spring return (SR) version wide range of accessories including E/P positioner, limit switch box for position feedback, decluthable manual override gearbox and pilot solenoid valves complete the range to meet various application requriements.

Electric actuator is available in on/off or modulating control version and coms standard with manual override built in. The actuator is mounted on to the valve in normally open or normally closed position either directly or using customized mounting bracket. It is fully tested for alignment and proper fuctioning before delivery.

Specifications - Pneumatic Actuator

Function	Double Acting (DA) or Spring Return (SR)
Housing	Extruded aluminum alloy, hard anodized
End cap	Pressure die cast aluminum alloy, epoxy coated
Pinion	Carbon steel, nickel plated
Piston	Cast aluminum / Steel hard anodized / Zinc galvanized
Cap Screw	Stainless Steel
Spring	Spring Steel, Drip Coated
Bearing and Guide	Engineering plastic
Travel Stop Cam	Alloy Steel
Adjustment Screw	Stainlees Steel
Seal	NBR
Mounting Bracket	Aluminum, stainlees steel, alloy steel
Operating Medai	Dry or lubricated compressed air or non-corrosive gases
Supply Pressure	Min 3 bars / Max. 8 bar
Operating Temperature	-20°C to +80°C (NBR) Lower of higher temperature version on request
Rotation	90°
Travel Adjusment	± 5°
Connection and Mounting	Namur, ISO5211 and DIN3337
Torque Output	3 Nm to 13024 Nm (DA) 4 Nm to 65844 Nm (SR)
Selection	Actuator is selected and matched in accordance to each process operating conditions and requirement to ensure proper functioning of the actuated valve

Specifications - Electric Actuator

Function	On/Off or Modulating
Housing	Aluminum alloy, epoxy powder coated
Gear	Steel / aluminum bronze
Screws	Stainlees steel
Indicator Cover	Polycarbonate
Shaft / Adaptor	Alloy Steel
Seal	NBR
Power Supply	24VDC, 110VAC, 220VAC, 380VAC
Motor	Squirrel cage asynchronous motor
Limit Switch	SPST, 250VAC10A, each for Open and Close positions
Rotation	90°C (± 10°) other rotation on request
Stall protection	Internal overheating thermal protection, open @ 120°C / close @ 97°C (± 5°C)
Manual Operation	Mechanical system by allen key
Conduit Entry	2 x M18
Operating Temperature	-20°C to +70°C
Ambient Humidity	Max. 90% RH
Mounting	ISO5211
Torque Output	30 Nm to 1000 Nm (2000 Nm on request)
Selection	Actuator is selected and matched in accordance to each process operating conditions and requirement to ensure proper functioning of the actuated valve
Options	
Space Heater, 7 .... 10W (110/220VAC)	
Position Feedback Potentiometer (1K .. 10K)	
Position Feedback Sensor with Current output (4 ... 20mA)	
Proportional Control Unit for modulating control (input/output signal, 4 ... 20mA, 1 ... 5 VDC, 1 ... 10 VDC)	
Power Failure Sell Reset	
Quick Opening Version	

* Design, Dimensions and Materials are subject to change without notice. Copyright 2021 by ARC INTERTRADE CO.,LTD.

Pneumatic Actuated Version

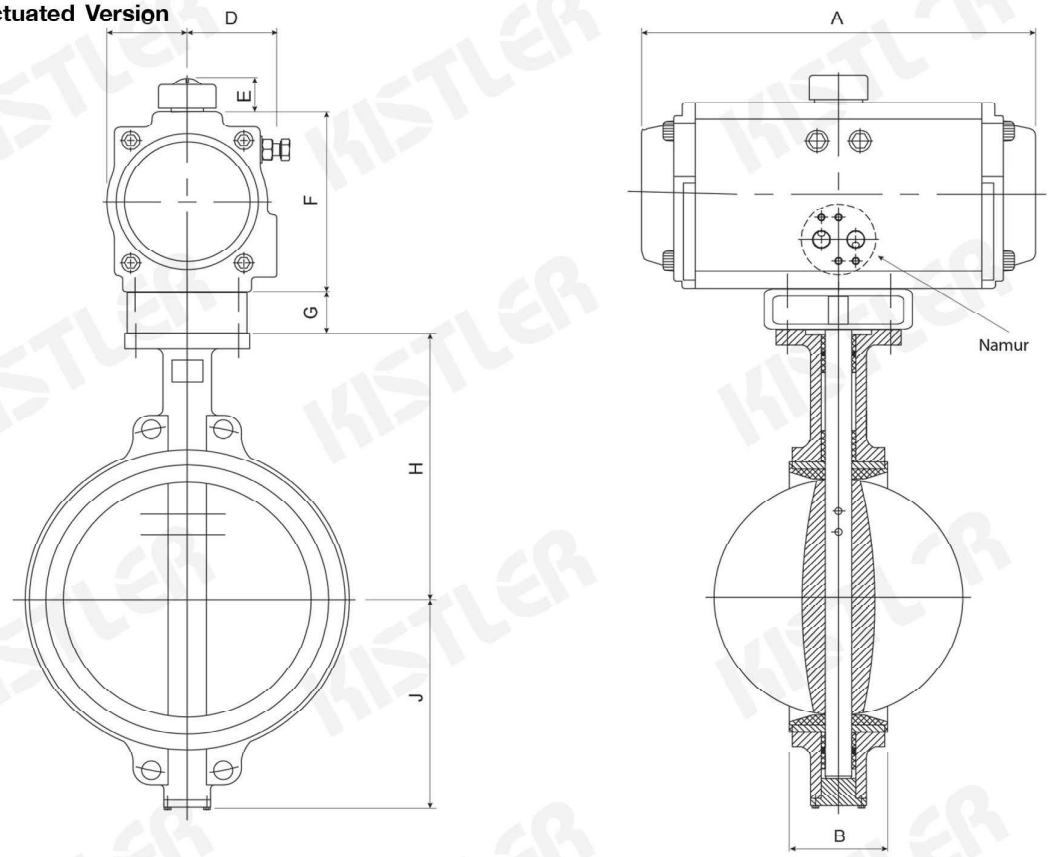

Electric Actuated Version

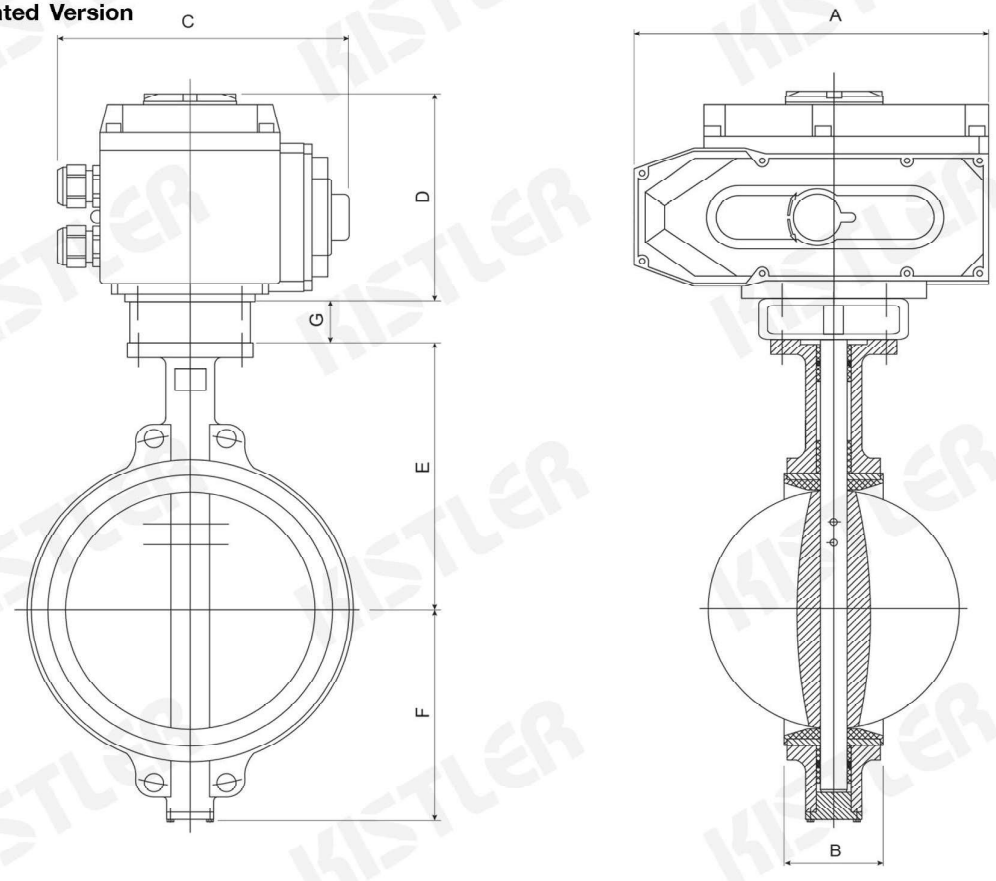

* Design, Dimensions and Materials are subject to change without notice. Copyright 2017 by APG INTERTRADE CO.,LTD.

INSTALLATION GUIDE FOR BUTTERFLY VALVE

Installation Guide

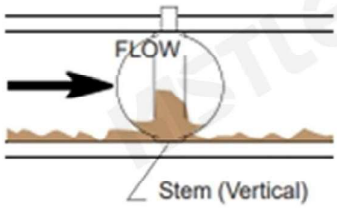

Incorrect Installation
Sludge builds up on disc and stem

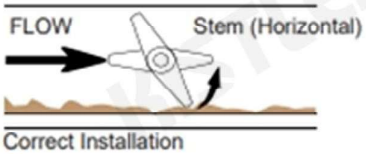

Correct Installation
Sludge passes under disc

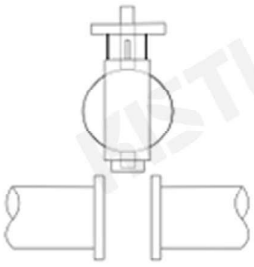

Incorrect Installation
Pipe not spread, disc open beyond valve body face which will result in disc edge damage when it hits pipe flange

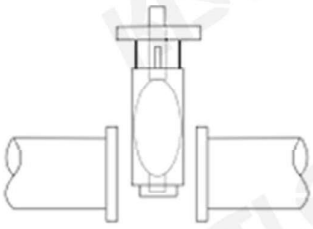

Correct Installation
Pipe spread and align, disc open within valve body face

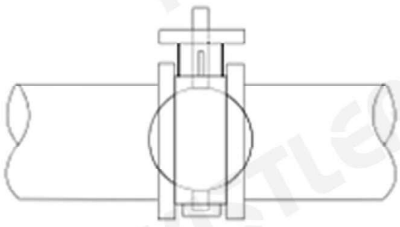



With disc fully open, tighten all flange-bolts according to the tightening pattern

Valve Location

- Resilient seated butterfly valves should be installated if possible a minimum of 6 pipe diameters from other line elements, example, elbows, pumps, valves. When it is not possible, it is important to achieve as much distance as possible.
- Where the resilient seated butterfly valve is connected to a check valve or pump, use an expansion joint between them to ensure the disc does not interfere with the adjacent equipment.

Valve Orientation

- In general, it is recommended that resilient seated valve be installed with the stem in the vertical position and the actuator mounted vertically above the valve.
- It is not recommended that the valve be installed in an upside down position.
- For slurries, sludge, mine tailing, pulp stock, dry cement and any media with sediments or particles, it is recommended that the resilient valve be installed with the lower disc edge opening in the down stream direction (please refer to picture).

Procedures

- Make sure the pipleine and pipe flanges faces are clean. Any foreign material can obstruct disc movement or damage the disc or seat of the valve.
- The wafer butterfly valves can be installed directly in between flanges wihout gasket.
- Align the piping and then spread the flanges a distance apart so as to permit the valve body to be easily dropped between the flanges without contacing the pipe flanges.
- Insert in the lower part of flanges at least two flange-bolts.
- Open the valve to position the valve disc to approx. 10 to 15 mm. inside the face of the seat (approx. 10° to 20° open).
- For valve installed with failed safe actuator, it is recommended to remove the actuator.
- Insert the valve between the flanges taking care not to damage the seat faces. Use the previously fitted flange-bolts to hold the valve applicalbe.
- Insert the flange-bolt through centering lugs of valve.
- Span the valve body with all flange-bolts, but do not tighten the bolts.
- Carefully open the disc to the full open position. making sure the disc does not hit the adjacent pipe inside diameter.
- Systematically remove jack bolts or other flange spreaders and hand tighten the flange-bolts.
- Very slowly close the valve disc to ensure disc edge clearance from the adjacent pipe flange inside diameter and check for smooth operation.
- Then open the disc to full open and tighten all flange-bolts according to the tightening pattern shown and to adequate torque below.
- Valve i nstallation with fully closed disc can distort the seat during bolt tightening and will increase initial torque.
- Finally repeat a full close to full open rotation of the disc to ensure proper clearances and operation.
- For installing resilient seat butterfly valve between welding type flanges, first place the valve between the flanges with the flange bores and valve body aligned properly. The disc should be in the approx. 10° to 20° open position and inside the face of the seat.
- Span the body with bolts.
- Take the assembly of flange-body-flange and align it properly to the pipe.
- Tack weld the flanges to the pipe.
- Remove the bolts and the valve from the pipe flanges after tack welding and then complete the welding of the flanges without the valve.
- Be sure to let the pipe and flanges cool before installing the valve as the procedures mentioned before.
- Never complete the welding process (after tacking) with the valve between pipe flanges. This causes severe seat damage due to heat tranfer from the welding.

Recommended Bolt Tightening Torques for up to Class 150 service

Valve Size (mm.)	Min. Torue (Nm)	Max. Torque (Nm)
40 to 100	30	80
125 to 200	40	130
250 to 300	70	270

* Design, Dimensions and Materials are subject to change without notice. Copyright 2021 by KISTLER INTERNATIONAL CO.,LTD.

RESILENT SEAT BUTTERFLY VALVE



Fig. BFV100L - WAFER Ductile Iron Body Lever Operated
BFV100G - WAFER Ductile Iron Body Gear Operated

Butterfly valves of KISTLER's design is apparent which utilize the phenolic-backed cartridge seat. These valves feature precision machined parts insuring years of dependable operation. With many body/trim combinations. The design can be suitable for BS/DIN/ANSI/JIS/UNI standard, etc. There are coating epoxy paint of 200um.

FEATURE

1. Small in size, light in weight. Easy installation & maintenance.
2. Simple and compact construction, quick 90 degrees on-off operation. Minimized operating torque, energy saving.
3. Long service life. Bubble-tight sealing with no leakage under the pressure test.
4. One piece shaft design ensures rigidity and stability of the shaft or disc assembly and minimize disc stress.
5. The operator top flange conforms to ISO5211 which Electric or Pneumatic actuator that have ISO5211 flange can be directly mounted.
6. Designed Standard API 609.

MATERIALS

PART NAME	STANDARD MATERIALS
Body	Ductile Iron (A536)
Disc	SUS 304 (CF8) , SUS 316 (CF8M)
Seat	EPDM , Buna-N (NBR)
Stem	Stainless Steel ASTM 410
Pin	SUS 316 (CF8M)
O-Ring	EPDM , Buna-N (NBR)
Bushing	PTFE

PERFORMANCE

NOMINAL DIAMETER		1.1/2" - 12" (50 - 300mm)	14" - 40" (350 - 1000mm)
Max.Working Pressure		16 bar (232 psi.)	10 bar (150 psi.)
Max.Working Temperature		NBR 10°C + 80°C EPDM - 10°C + 120°C PTFE - 10°C + 150°C	
Testing Pressure	Body	24 bar (348 psi.)	15 bar (218 psi.)
	Seat	17.6 bar (255 psi.)	11 bar (160 psi.)

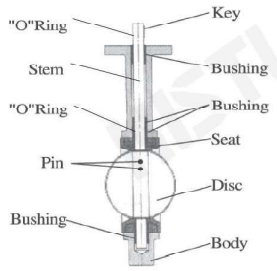

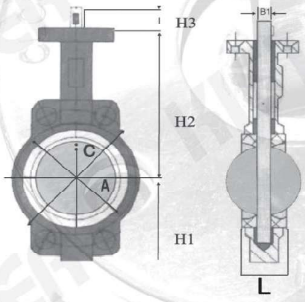

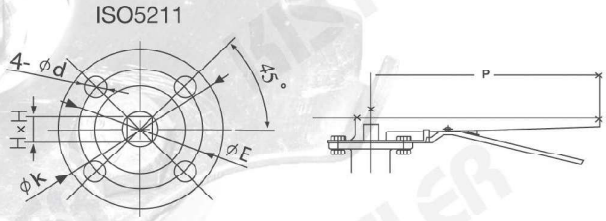

DIMENSIONS

Unit : mm.

DN(mm)	INCH	L	H1	H2	H3 L / G	B1	ISO5211	Ø E	Ø K	4-Ød	P	C	Cv Valve Rating (Full Open 90)
40	1.1/2"	34	70	120	26/28	11	F05	50	65	4-19	230		85
50	2"	43	80	140	30/32	11	F07	70	90	4-19	266		120
65	2.1/2"	46	89	150	30/32	11	F07	70	90	4-19	266	This dimension	200
80	3"	46	95	158	30/32	11	F07	70	90	4-19	266	can be acc to	302
100	4"	52	114	176	30/32	11	F07	70	90	4-23	266	BS5155,	600
125	5"	56	127	190	30/32	14	F07	70	90	4-23	266	ANSI 125/150,	1,022
150	6"	56	139	211	30/32	14	F07	70	90	4-23	266	DIN PN10/	1,579
200	8"	60	175	235	40/45	17	F10	102	125	4-25.4	355	PN16,	3.136
250	10"	68	203	265	- /45	22	F10	102	125	4-25.4	Gear	JIS10K,	5,340
300	12"	78	242	305	- /45	22	F10	102	125	4-28.4	Gear	5K(1.1/2"-14"),	8,250
350	14"	78	267	368	- /45	22	F10	102	125	4-28.4	Gear	UNI	11,917
400	16"	102	321	405	- /52	27	F14	140	175	4-28.4	Gear	standard, etc.	16,388
450	18"	114	328	422	- /52	27	F14	140	175	4-31.8	Gear		21,705
500	20"	127	361	480	- /65	36	F14	140	175	4-31.8	Gear		27,908
600	24"	154	459	562	- /70	36	F16	165	210	20.35.1	Gear		43,116

* Design, Dimensions and Materials are subject to change without notice. Copyright 2019 by APC INTERTRADE CO.,LTD.

RESILIENT SEAT BUTTERFLY VALVE

Fig. BFV100LD - WAFER Ductile Iron Body Lever Operated

Aluminum Alloys Handle

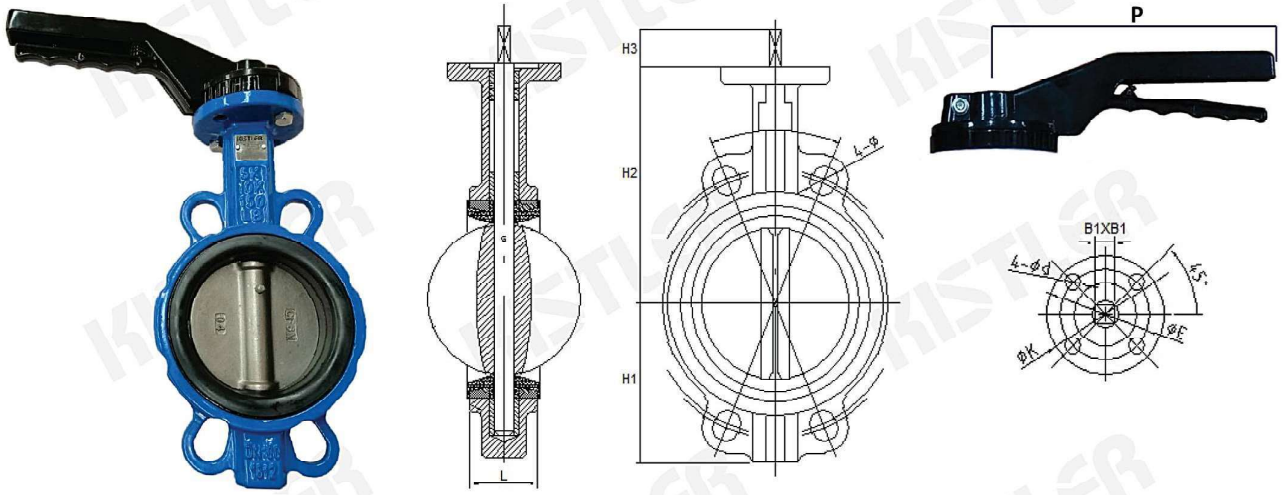

FEATURE

1. Design Aluminum Alloys Handle.
2. It is the perfect choice for areas with space constraints.
3. Small in size and light in weight, easy to intall. It can be mounted wherever needed, suitable for various actuators.
4. Simple, compact structure, quick 90 degree on-off operation.
5. Disc has two-way bearing perfect seal, without leakage under the pressure test.
6. Flow curve tending to straight-line. Excellent regulation performance
7. Strong wash and brush resistance and can fit to bad working condition
8. Center plate structure, small torque for open and close.
9. Long service life. Standing the test fo 10000 times opening and closing operation.
10. Can be used in cutting off and regulation medium.
11. Disc and Stem are fastened by pin, more stable.

MATERIALS

PART NAME	SPECIFICATION
Body	Ductile Iron
Disc	Stainless Steel 316 (CF8M)
Seat	EPDM
Shaft	Stainless Steel ASTM 410
Pin	Stainless Steel 316 (CF8M)
O-Ring	EPDM
Bushing	PTFE
Handle	Aluminum Alloys

PERFORMANCE

Nominal Diameter (mm.)		2"(50mm.) - 8"(200mm.)
Max.Working Pressure		16 bar (232 psi.)
Max.Working Temperature		-10°C + 120°C
Testing Pressure	Body	24 bar (348 psi.)
	Seat	17.6 bar (255 psi.)

DIMENSIONS

Unit : mm.

DN(mm).	INCH	L	H1	H2	H3	4 - Ø	B1 x B1	ISO5211	Ø E	Ø K	4 - Ød	P	C
50	2"	43	80	140	30	80	9x9	F07	70	90	10	200	
65	2.1/2"	46	89	150	30	89	9x9	F07	70	90	10	200	This dimension
80	3"	46	95	158	30	95	9x9	F07	70	90	10	200	can be acc to BS5155,
100	4"	52	114	176	30	114	11x11	F07	70	90	10	200	JIS10K, ANSI 125/150
125	5"	56	127	190	30	127	14x14	F07	70	90	10	400	DIN PN10/PN16,
150	6"	56	139	211	30	139	14x14	F07	70	90	10	400	UNI Standard,etc.
200	8"	60	175	235	40	175	17x17	F10	102	125	12	400	

* Design, Dimensions and Materials are subject to change without notice. Copyright 2019 by APC INTERTRADE CO.,LTD.

RESILIENT SEAT BUTTERFLY VALVE

Fig. BFV100L - WAFER Cast Iron Body Lever Operated
BFV100G - WAFER Cast Iron Body Gear Operated



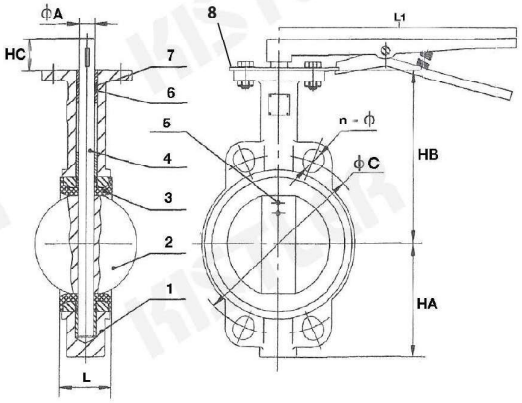

FEATURE

1. Small in size, light in weight. Easy installation & maintenance.
2. Simple and compact consturction, quick 90 degrees on-off operation. Minimized operatiog torque, energy saving.
3. Long service life. Bubble-tight sealing with no leakage under
4. the pressure test.
   One piece shaft design ensures rigidity and stability fo the shaft or disc assembly and minimize disc stress.
5. The operator top flange conforms to ISO5211 which Electric or Pneumatic actuator that have ISO5211 flange can be directly mounted.
6. Designed Standard API 609.

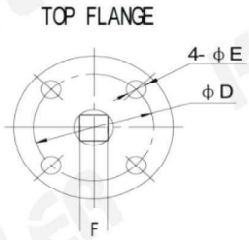

MATERIALS

NO.	PART NAME	SPECIFICATION
1	Body	Cast Iron / Ductile Iron
2	Disc	Stainless Steel 316 (CF8M)
3	Seat	PTFE
4	Stem	Stainless Steel ASTM 410
5	Taper Pin	Stainless Steel 316 (CF8M)
6	Bushing	PTFE
7	O-ring	EPDM
8	Plate	Steel Chromium Plated, HDG, Stainless Steel

PERFORMANCE

Nominal Diameter (mm.)		2"(50mm.) - 12"(300mm.)
Max.Working Pressure		16 bar (232 psi.)
Max.Working Temperature		-10 °C + 150 °C
Testing Pressure	Body	24 bar (348 psi.)
	Seat	17.6 bar (255 psi.)

DIMENSIONS

Unit : mm.

DN (mm)	INCH	L	HA	HB	HC	Ø A	F	Ø D	4 - Ø E	L1	C
50	2"	43	80	140	30/32	11	11x11	F07	4-19	266	
65	2.1/2"	46	89	150	30/32	11	11x11	F07	4-19	266	
80	3"	46	95	158	30/32	11	11x11	F07	4-19	266	
100	4"	52	114	176	30/32	11	11x11	F07	4-23	266	
125	5"	56	127	190	30/32	14	14x14	F07	4-23	Gear	This dimension
150	6"	56	139	211	30/32	14	14x14	F07	4-23	Gear	can be acc to BS5155,
200	8"	60	175	235	40/45	17	17x17	F10	4-25.4	Gear	JIS10K, ANSI 125/150
250	10"	68	203	265	- /45	22	22x22	F10	4-25.4	Gear	DIN PN10/PN16,
300	12"	78	242	305	- /45	22	22x22	F10	4-28.4	Gear	UNI Standard,etc.
350	14"	78	267	368	- /45	22	22x22	F10	4-28.4	Gear	
400	16"	102	321	405	/52	27	27x27	F14	4-28.4	Gear	
450	18"	114	328	422	- /52	27	27x27	F14	4-31.8	Gear	
500	20"	127	361	480	- /65	36	36x36	F14	4-31.8	Gear	
600	24"	154	459	562	- /70	36	36x36	F16	4-35.1	Gear	

* Design, Dimensions and Materials are subject to change without notice. Copyright 2018 by APO INTERTRADE CO.,LTD.

Fig. BFV200L - LUG Cast Iron Body Lever Operated
BFV200G - LUG Cast Iron Body Gear Operated
BFV200LS - LUG Stainless Body Lever Operated
BFV200GS - LUG Stainless Body Gear Operated



APPLICATIONS

1. The design can be suitable for ANSI125 / 150 Standard (option : BS / DIN / JIS / UNI Standard)
2. For water, neutral liquids, oil and air, etc.
3. Coating epoxy painting, 200um.

MATERIALS

PART NAME	STANDARD MATERIALS	OPTIONAL MATERIALS
Body	Cast Iron (A126 Class B)	Ductile Iron, WCB, SUS304, SUS316
Disc	SUS 304 (CF8)	SUS 316 (CF8M)
Seat	EPDM or Buna-N (NBR)	PTFE, Viton, Neoprene
Shaft	Stainless Steel ASTM 410	Stainless Steel ASTM 416
Pin	SUS 316 (CF8M)	Stainless Steel ASTM410, 416

PERFORMANCE

NOMINAL DIAMETER		2" - 12" (50 - 300mm)	14" - 40" (350 - 1000mm)
Max.Working Pressure		16 Bar (232 psi)	10 Bar (150 psi)
Max.Working Temperature		NBR -10°C +80°C EPDM -10°C +120°C PTFE -10°C +150°C	
Testing Pressure	Body	24 bar (348 psi.)	15 bar (218 psi.)
	Seat	17.6 bar (255 psi.)	11 bar (160 psi.)

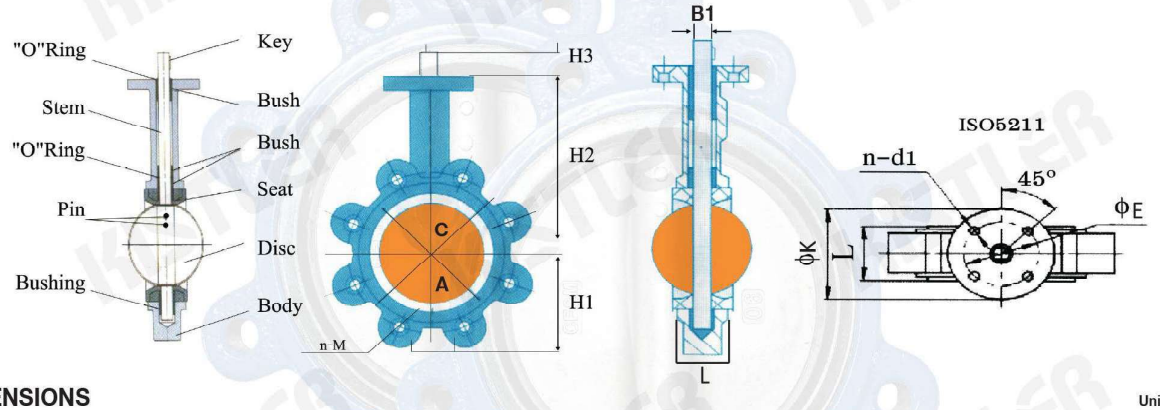

DIMENSIONS

Unit : mm.

DN(mm)	INCH	L	H1	H2	H3	B1	ϕE	ϕK	4-ϕd	A	C	M	
												ANSI	PN10
50	2"	43	80	162	32	13	50	70	4-7	88	121	4-5/8"	4-M16
65	2.1/2"	46	85	175	32	13	50	70	4-7	108	140	4-5/8"	4-M16
80	3"	46	85	181	32	13	50	70	4-7	118	152	4-5/8"	8-M16
100	4"	52	114	200	32	16	70	90	4-9.5	156	191	8-5/8"	8-M16
125	5"	56	127	213	32	19	70	90	4-9.5	181	216	8-3/4"	8-M16
150	6"	56	140	225	32	19	70	90	4-9.5	210	241	8-3/4"	8-M20
200	8"	60	175	260	45	22	102	125	4-11.5	260	299	8-3/4"	12-M20
250	10"	68	203	292	45	29	102	125	4-11.5	321	362	12-7/8"	12-M24
300	12"	78	241	332	45	32	102	140	4-11.5	384	432	12-7/8"	16-M24
350	14"	78	270	368	45	32	102	140	4-11.5	400	476	12-1"	16-M27
400	16"	102	320	400	51	33	165	210	4-22.2	465	540	16-1"	20-M27
450	18"	114	328	422	51	34	165	210	4-22.2	541	578	16-11/8"	20-M30
500	20"	127	368	479	64	41.15	165	210	4-22.2	559	635	20-11/8"	20-M33
600	24"	154	410	562	70	51	165	210	4-22.2	686	749.3	20-11/4"	24-M33

* Design, Dimensions and Materials are subject to change without notice. Copyright 2018 by ADC INTERTRADE CO.,LTD.



Size : DN50 - DN1200

Nominal Pressure : PN10/16

Working Temperature : 10°C - 120°C

Flange Connection : ANSI150, PN10, PN16, JIS10K

Suitable Medium : Chemicals, air warter, steam, acides, salts, etc.

Feature :

1. Small in size, light in weight, easy installation and maintenance.
2. Simple and compact construction, quick 90 degree on-off operation.
3. Minimized operating torque, energy saving.
4. Flow curve tending to straight line, excellent regulation performance.
5. Long service life, standing the test of ten thousands opening/closing operations.
6. Wide selection of materials. applicable to various medium.

SPECIFICATION STANDARD :
Design Standard : API609, EN593 / Test & Inspection : API598 / Top Mounting flange as standard : ISO5211

PERFORMANCE

NOMINAL DIAMETER		2 - 12"	14" - 40"
Nominal pressure (Mpa)		1.6	1.0
Test pressure (Mpa)	Shell	2.4	1.5
	Seat	1.76	1.1
Applicable temperature		-10°C - 120°C	
Applicable medium		Fresh water, Sewage, Sea Water, Air, Vapor, Food, Medicne, Oils, Acids, Alkalis, etc.	
Operation mode		Manual, Worm gear, Pneumatic, Electric actuator, etc.	

STANDARD MATERIALS OF MAIN PARTS :

NO.	PART	MATERIAL
1	Body	Ductile Iron
2	Seat	EPDM,NBR
3	Shaft	Stainless Steel 410
4	Disc	Stainless Steel 304,316
5	Pin	Stainless Steel 410
6	Bushing	PTFE
7	O-ring	EPDM, NBR

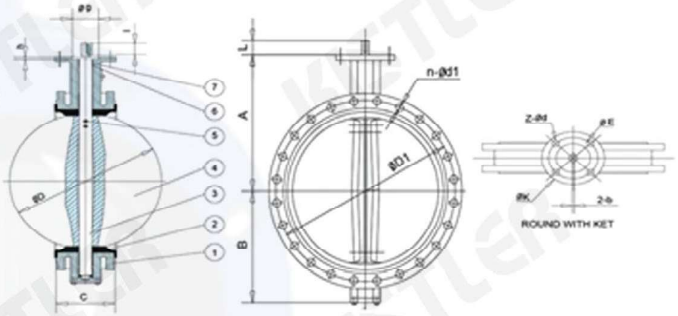

DIMENSIONS : mm.

SIZE		A	B	C	D	L	KEY	UPPER LANGE					ANSI		DIN PN10/16	
INCH	DN						bx1	K	E	z-d	g	h	D1	n-d1	D1	n-d1
2"	50	120	83	108	52.9	32	3x16	70	50	4-7	35	3	120.5	4-19	125	4-18
2.1/2"	65	130	93	112	64.5	32	3x16	70	50	4-7	35	3	139.5	4-19	145	4-18
3"	80	145	100	114	78.8	32	3x16	70	50	4-7	35	3	152.5	4-19	160	4/8-18
4"	100	155	114	127	104	32	5x19	90	70	4-9	55	3	190.5	8-19	180	8-18
5"	125	170	125	140	123.3	32	5x19	90	70	4-9	55	3	216	8-22	210	8-18
6"	150	190	143	140	155.6	32	5x19	90	70	4-9	55	3	241.5	8-22	240	8-23
8"	200	205	170	152	202.5	45	5x19	125	102	4-12	70	3.5	298.5	8-22	295	8/12-23
10"	250	235	198	165	250.5	45	8x28	125	102	4-12	70	3.5	362	12-25	350/355	12-23/27
12"	300	280	223	178	301.6	45	8x28	140	102	4-12	70	3.5	432	12-25	400/410	12-23/27
14"	350	310	279	190	333.3	45	8x28	140	102	4-12	70	3.5	479	12-29	460/470	16-23/27
16"	400	340	300	216	389.6	51.2/72	10x50	175	140	4-18	100	4	540	16-29	515/525	16/27/30
18"	450	375	345	222	440.5	51.2/72	10x50	175	140	4-18	100	4	578	16-32	565/585	20-27/30
20"	500	430	355	229	491.6	52.7/77.5	10x50	175	140	4-18	100	4	635	20-32	620/650	20-27/33
24"	600	500	410	267	592.5	70.2/80	2-16x60	210	165	4-23	130	5	749.5	20-35	725/770	20-30/36
28"	700	560	478	292	695	66/82	2-18x63	300	254	8-18	200	5.5	863.5	28-35	840	24-30/36
32"	800	620	529	318	794.7	66/82	2-18x63	300	254	8-18	200	5.5	978	28-41	950	24-33/39
36"	900	665	584	330	864.7	118	2-20x100	300	254	8-18	200	5.5	1086	32-41	1050	28-33/39
40"	1000	735	657	410	965	141	2-22x140	300	254	8-18	200	5.5	1200	36-41	1160/1170	28-36/42

* Design, Dimensions and Materials are subject to change without notice. Copyright 2021 by APO INTERTRADE CO.,LTD.

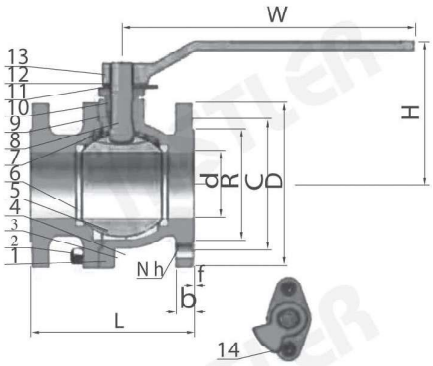

Fig. BV-401 (ANSI150)
BV-402 (JIS10K)
BV-403 (PN10)
BV-404 (PN16)



SPECIFICATION

- Designed and Manufacture : JIS B2031,JIS B2002,DN15-100(6).
- Face to Face dimensions : ASME B16.10,JIS B2002.
- Pipe flanges and flanged ends : ASME B16.1,JIS B2212.

FEATURE AND APPLICATION

1. 2-piece and Floating Ball Design by Full Port.
2. Blow-out proof stem.
3. Flange End Connections ; JIS10K, ANSI150, PN10, PN16
4. Adjustable Stem Packing.
5. Operate by Lever Handle for 1.1/2"- 8", Gear Operate for 10" and Lager
6. For General and Industrial Services.
7. Water, Oil, Gas and Steam.

MATERIALS

NO.	NAME OF PARTS	SPECIFICATION
1	Body	Cast Iron (A126, FC200, GG25)
2	Nut	Cast Iron (A126, FC200, GG25)
3	Bushing	Carbon Steel (SS400)
4	Bolting	Carbon Steel (SS400)
5	Ball	Stainless Steel (CF8, SCS13, SUS304)
6	Seat	PTFE (TEFLON)
7	Gasket	PTFE (TEFLON)
8	Stem	Stainless Steel 410
9	Stem Packing	PTFE (TEFLON)
10	Gland Flange	Cast Iron (A126, FC200, GG25)
11	Stop Collar	Carbon Steel (SS400)
12	Circlip	Carbon Steel (SS400)
13	Hand Lever	Ductile Iron (A395, QT450, GGG40)
14	Gland Bolt	Carbon Steel (SS400)

PERFORMANCE

Application	Max.Working Pressure & Temperature	Testing Pressure
Water, Oil, Gas	200 psi. (14 bar) 120°C	- Hydrostatic shell test 25 bar
Saturated Steam	70 psi. (5 bar) 150°C	- Hydrostatic seat test 15 bar
		- Air test 6 bar

DIMENSIONS

Unit : mm.

SIZE inch.	H	L	W	JIS10K			ANS150			PN10			PN16		
				D	C	N	D	C	N	D	C	N	D	C	N
1.1/2"	115	168	220	140	105	4	127	98	4	150	110	4	150	110	4
2"	115	178	245	155	120	4	152	121	4	165	125	4	165	125	4
2.1/2"	135	190	285	175	140	4	178	140	4	185	145	4	185	145	4
3"	155	203	300	185	150	8	191	152	4	200	160	8	200	160	8
4"	170	229	320	210	175	8	229	191	8	220	180	8	220	180	8
5"	195	356	350	250	210	8	254	216	8	250	210	8	250	210	8
6"	240	394	380	280	240	8	279	241	8	285	240	8	285	240	8
8"	295	457	420	330	290	12	343	299	8	340	295	8	340	295	12
10"	380	533	Gear	400	355	12	406	362	12	395	350	12	405	355	12
12"	680	610	Gear	445	400	16	483	432	12	445	400	12	460	410	12

* Design, Dimensions and Materials are subject to change without notice. Copyright 2017 by APC INTERTRADE CO.,LTD.

Fig. BM-121 (ANSI150)
BM-122 (JIS10K)
BM-123 (PN10)
BM-124 (PN16)

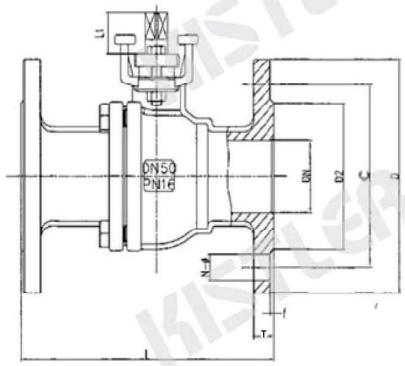

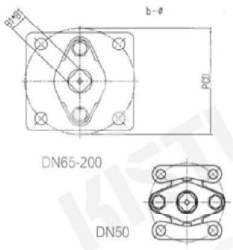



SPECIFICATION

- Designed and Manufacture : JIS B2031,JIS B2002.
- Face to Face dimensions : ASME B16.10,JIS B2002.
- Pipe flanges and flanged end : ASME B16.1,JIS B2212.

FEATURE AND APPLICATION

- The operator top flange conforms to ISO5211
- Electric or Pneumatic actuator that have ISO5211 flange can be directly mounted.
- 2-piece and Floating Ball Design by Full Port.
- Blow-out proof stem.
- Flange End Connections : JIS10K, ANSI150, PN10, PN16
- Adjustable Stem Packing
- Operate by Lever Handle
- For Genaral and Industrial Services.
- Water, Oil, Gas and Steam.
- Body Epoxy Coating.

MATERIALS

NAME OF PARTS	SPECIFICATION
Body	Ductile Iron
Bonnet	Ductile Iron
Nut	Carbon Steel
Bolting	Carbon Steel
Ball	Stainless Steel 304
Seat	PTFE
Gasket	PTFE
Stem	Stainless Steel 410
Stem Packing	PTFE
Gland Flange	Ductile Iron
Stop Collar	Carbon Steel
Circlip	Carbon Steel
Hand Lever	Ductile Iron
Gland Bolt	Carbon Steel

PERFORMANCE

Application	Max.Working Pressure & Temperature	Testing Pressure
Water, Oil, Gas	200 psi. (14 bar) 120°C	- Hydrostatic shell test 25 bar
Saturated Steam	70 psi. (5 bar) 150°C	- Hydrostatic seat test 17.5 bar
		- Air test 6 bar

DIMENSIONS

Unit : mm.

DN(mm)	inch	L	L1	D	C	D2	T	f	N-Ø	B1*B1	PCD	b-Ø	ISO 5211
50	2"	182	30	155	120	97	17	1.6	4-Ø19	14*14	72	4-Ø10	F07
65	2.1/2"	190	25	175	140	120	22	1.6	4-Ø19	14*14	72	4-Ø10	F07
80	3"	203	30	185	150	127	22	1.6	8-Ø19	17*17	96	4-Ø12	F10
100	4"	233	40	210	175	154	22	1.6	8-Ø19	22*22	96	4-Ø12	F10
125	5"	367	48	250	210	185	24	1.6	8-Ø22	28*28	132	4-Ø18	F14
150	6"	394	40	280	240	216	26	1.6	8-Ø22	28*28	152	4-Ø18	F14
200	8"	463	50	330	290	265	30	1.6	12-Ø23	32*32	152	4-Ø22	F16

* Design, Dimensions and Materials are subject to change without notice. Copyright 2017 by APC INTERTRADE CO.,LTD.

Outside screw and yoke, Rising stem
Bolted bonnet, Solid wedge disc

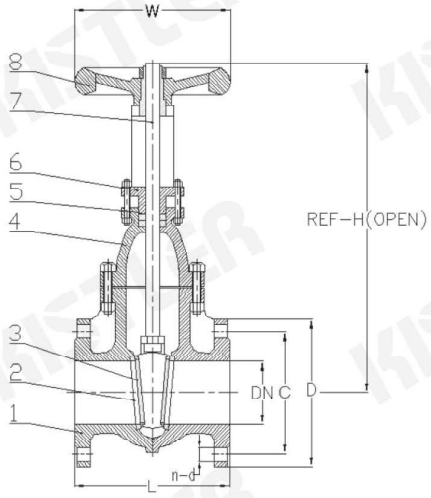

Fig. GV-501 (ANSI150)
GV-502 (JIS10K)
GV-503 (PN10)
GV-504 (PN16)



SPECIFICATION

- Designed and Manufacture : JIS B2031
- Face to Face dimensions : ASME B16.10, JIS B2002
- Pipe flanges and flanges ends : ASME B16.1, JIS B2210

FEATURE AND APPLICATION

1. Outside screw and yoke, Rising stem.
2. Hand wheel operation. Flanged End Connections.
3. Bolted bonnet, Solid Wedge Disc Design.
4. For General and Industrial Service.
5. Water, Oil, Gas and Steam.
6. Body Epoxy Coating.

MATERIALS

NO.	NAME OF PARTS	SPECIFICATION
1	Body	Cast Iron (A126, FC200, GG25)
2	Seat seal ring	Bronze (B62) , SUS304 (CF8)
3	Disc	Cast Iron (A126, FC200, GG25)
4	Bonnet	Cast Iron (A126, FC200, GG25)
5	Packing	Non-Asbestos (option;Graphite)
6	Gland	Cast Iron (A126, FC200, GG25)
7	Stem	SS410
8	Hand wheel	Cast Iron (A126, FC200, GG25)

PERFORMANCE

Application	Max.Working Pressure & Temperature	Testing Pressure
Water & Oil	200 psi. (14 bar) 120°C	- Hydrostatic shell test 25 bar
Saturated Steam	70 psi. (5 bar) 120°C	- Hydrostatic seat test 15 bar
		- Air test 6 bar

DIMENSIONS

Unit : mm.

SIZE inch.	H	L	W	JIS10K			ANSI150			PN10			PN16		
				D	C	N	D	C	N	D	C	N	D	C	N
2"	330	180	165	155	120	4	152	121	4	165	125	4	165	125	4
2.1/2"	350	190	165	175	140	4	178	140	4	185	145	4	185	145	4
3"	428	200	200	185	150	8	191	152	4	200	160	8	200	160	8
4"	513	229	200	210	175	8	229	191	8	220	180	8	220	180	8
5"	625	250	250	250	210	8	254	216	8	250	210	8	250	210	8
6"	703	270	250	280	240	8	279	241	8	285	240	8	285	240	8
8"	952	290	300	330	290	12	343	299	8	340	295	8	340	295	12
10"	1150	330	320	400	355	12	406	362	12	395	350	12	405	355	12
12"	1314	350	350	445	400	16	483	432	12	445	400	12	460	410	12

* Design, Dimensions and Materials are subject to change without notice. Copyright 2017 by APC INTERTRADE CO.,LTD.

Outside screw and yoke, Rising stem
Bolted bonnet, Plug disc

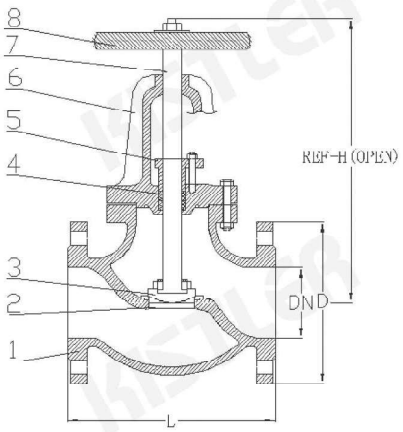

Fig. GLB-301 (ANSI150)
GLB-302 (JIS10K)
GLB-303 (PN10)
GLB-304 (PN16)



SPECIFICATION

- Designed and Manufacture JIS B2031
- Face to Face dimensions :
  ASME B16.10,JIS B2210
- Pipe flanges end : ASME B16.1,JIS B22P

FEATURE AND APPLICATION

1. Outside screw and yoke, Rising stem.
2. Hand wheel operation, Flanged End Connections.
3. Bolted bonnet, Plug Disc Design.
4. For General and Industrial Service.
5. Water, Oil, Gas and Steam.
6. Body Epoxy Coating.

MATERIALS

NO.	NAME OF PARTS	SPECIFICATION
1	Body	Cast Iron (A126, FC200, HT200)
2	Seat seal ring	Stainless Steel (CF8,SCS13,SUS304)
3	Disc	Cast Iron (A126, FC200, HT200)
4	Packing	Non-Abestos (option:Graphite)
5	Gland	Cast Iron (A126, FC200, HT200)
6	Bonnet	Cast Iron (A126, FC200, HT200)
7	Stem	Stainless Steel 410
8	Hand wheel	Cast Iron (A126, FC200, HT200)

PERFORMANCE

Application	Max.Working Pressure & Temperature	Testing Pressure
Water & Oil	200 psi. (14 bar) 120°C	- Hydrostatic shell test 25 bar
Saturated Steam	70 psi. (5 bar) 120°C	- Hydrostatic seat test 15 bar
		- Air Test 6 bar

DIMENSIONS

Unit : mm.

SIZE inch.	H	L	JIS10K			ANSI150			PN10			PN16		
			D	C	N	D	C	N	D	C	N	D	C	N
2"	260	203	155	120	4	152	121	4	165	125	4	165	125	4
2.1/2"	285	216	175	140	4	178	140	4	185	145	4	185	145	4
3"	310	241	185	150	8	191	152	4	200	160	8	200	160	8
4"	325	292	210	175	8	229	191	8	220	180	8	220	180	8
5"	385	330	250	210	8	254	216	8	250	210	8	250	210	8
6"	415	356	280	240	8	279	241	8	285	240	8	285	240	8
8"	485	495	330	290	12	343	299	8	340	295	8	340	295	12
10"	535	622	400	355	12	406	362	12	395	350	12	405	355	12
12"	625	698	445	400	16	483	432	12	445	400	12	460	410	12

* Design, Dimensions and Materials are subject to change without notice. Copyright 2017 by APC INTERTRADE CO.,LTD.

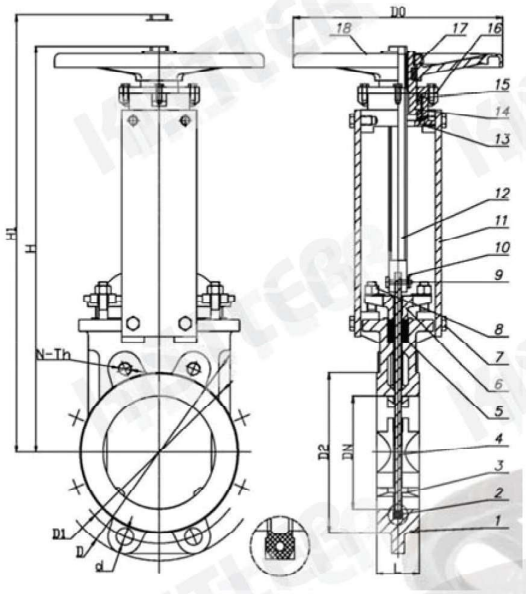

Fig. KG - 111 (ANSI150)
KG - 112 (JIS10K)
KG - 113 (PN10)
KG - 114 (PN16)



SPECIFICATION

- Designed and Manufacture : JB/T8691-1998
- Face to Face dimensions : GB/T15188
- Pipe flanges and flange ends : JIS B2212-1999

FEATURE AND APPLICATION

- Outside screw and yoke, Rising stem.
- Hand wheel operation, Flanged End Connections.
- For General and Industrial Service.
- Max working pressure : 10 bar (2"-10") / 6 bar (12"-16")
- Body Epoxy Coating

TESTING PRESSURE

- Hydrostatic
- Shell test 15 bar (2"-10") / 9 bar (12"-16")
- Seat test 11 bar (2"-10") / 6.6 bar (12"-16")

MATERIALS

NO.	NAME OF PARTS	SPECIFICATION
1,3	Body, Lug	Cast Iron
2	Seat	NBR
4	Disc	Stainless Steel 304
5	Packing	PTFE
6	Gland	WCB
7,8,10,17	Blot & Nut	Stainless Steel
9	Pin	SUS or WCB (6"-16")
11,13	Yoke, Yoke Head	Carbon Steel
12	Stem	Stainless Steel 410
14,15	Stem Nut, Bearing	Brass
16	Yoke head cap	Carbon Steel
18	Hand wheel	Ductile Iron

DIMENSIONS

Unit : mm.

SIZE inch.	H	L	H1	JIS10K			ANSI150			PN10			PN16			D2	D0	d
				D	D1	N-Th	D	D1	N-Th	D	D1	N-Th	D	D1	N-Th			
2"	290	48	360	155	120	4	152	121	4	165	125	4	165	125	4	100	180	Ø18
2.1/2"	310	48	415	175	140	4	178	140	4	185	145	4	185	145	4	120	180	Ø18
3"	350	51	455	185	150	8	191	152	4	200	160	8	200	160	8	130	220	Ø18
4"	405	51	515	210	175	8	229	191	8	220	180	8	220	180	8	155	240	Ø18
5"	450	57	959	250	210	8	254	216	8	250	210	8	250	210	8	185	240	Ø18
6"	510	57	675	280	240	8	279	241	8	285	240	8	285	240	8	215	280	Ø23
8"	610	60	805	330	290	12	343	299	8	340	295	8	340	295	12	265	300	Ø23
10"	765	70	965	400	355	12	406	362	12	395	350	12	405	355	12	325	320	Ø25
12"	820	76	1085	445	400	16	483	432	12	445	400	12	460	410	12	370	320	Ø25

* Design, Dimensions and Materials are subject to change without notice. Copyright 2018 by APC INTERTRADE CO.,LTD.

Fig. DCV - 603

Valve Design : API594
Valve Pressure Testing & Inspection : API598
Flange Connections : UNI Standard JIS10K, ANSI125/150, PN10/16



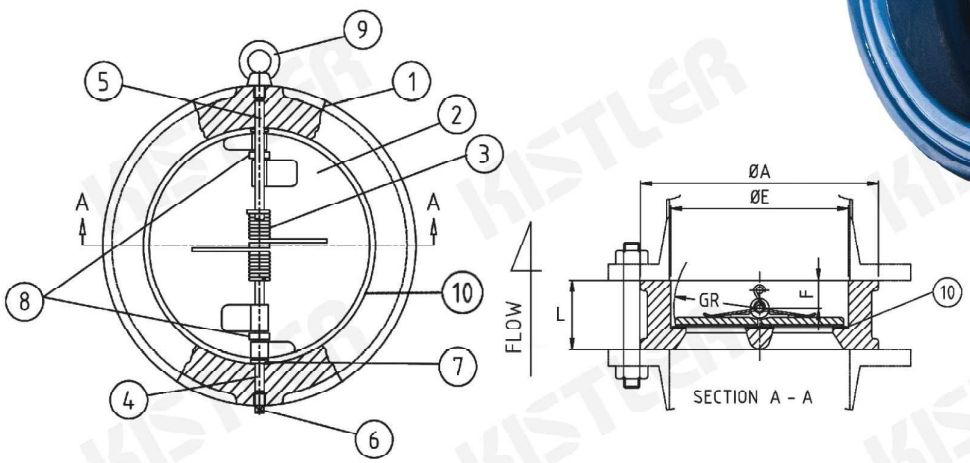

FEATURES & APPLICATIONS

1. This valve is tightly sealed without leakage under the pressure water test.
2. Safe and reliable in operation high interference resistance.
3. Suitable mediums : Fresh water, Sewage, Sea water, Air, Steam, Food, Medicine, Oils, Acids, etc.
4. This valve is used for preventing the back-going of medium in pipelines & equipments and the pressure of medium will bring and closing automatically. When the medium is back-going, valve disc the result of opening will automatically close to avoid accidents.
5. Body Epoxy Coating.

PERFORMANCE

Nominal Diameter		2" - 12" 50 - 300mm.	14" - 40" 350 - 1,000mm.
Max.Working Pressure		16 bar (232psi.)	10 bar (150psi.)
Max.Working Temperature		NBR -10°C - 80°C EPDM -10°C - 120°C	
Testing Pressure	Body	24 Bar (348 psi.)	15 Bar (218 psi.)
	Seat	17.6 Bar (255 psi.)	11 Bar (160 psi.)

MATERIALS

NO.	NAME OF PARTS	SPECIFICATION
1	Body	Cast Iron (A126, FC200)
2	Disc/Plate	SUS316 (CF8M, SCS14)
3	Spring	SUS304 (CF8, SCS13)
4	Hinge Pin	Stainless Steel (SS416)
5	Stop Pin	EPDM, NBR
6	Plug	Stainless Steel (SS416)
7	Body Bearing	PTFE (TEFLON)
8	Spring Bearing	PTFE (TEFLON)
9	Eye Bolt	Carbon Steel (SS400)
10	Body Seat	EPDM, NBR

DIMENSIONS

Unit : mm.

SIZE inch	2"	2.1/2"	3"	4"	5"	6"	8"	10"	12"	14"	16"	18"	20"
(DN),d mm.	50	65	80	100	125	150	200	250	300	350	400	450	500
L	43	46	64	64	70	76	89	114	114	127	140	152	152
A	101	121	131	156	187	217	267	328	375	420	483	538	593
E	65	80	94	117	145	170	224	265	310	360	410	450	505
GR	28.8	36.1	43.4	52.8	65.7	78.6	104	127	148	172.4	197.4	217.8	241.8
F	19	20	28	27	30	31	33	50	43	45	52	58	58

* Design, Dimensions and Materials are subject to change without notice. Copyright 2017 by APC INTERTRADE CO.,LTD.

ANSI125/150 Bolt Circle

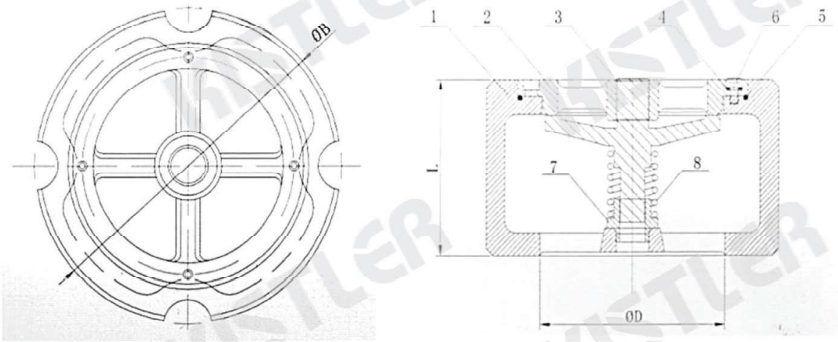

Fig. SLC - 605



FEATURE and APPLICATION

1. Eliminate water hammer with a check valve that operate smoothly and silently itself. This series features hand - lapped bronze to bronze seating with special stainless steel spring control to ensure positive, noiseless opening and closing.

2. The mating surfaces of the seat and disc are hand lapped. The disc is fully guided at the top and bottom to prevent binding and cocking. Parts can be replaced in the field - no special tools required. Disc for all sizes open with less than one pound per square inch pressure.

3. Body Epoxy Coating

4. Design Standard : API 594, Valve Pressure Testing : API 598

INSTALLATION

Equally effective installed vertically, horizontally and angle, consult factory for downward vertical flow. Westrongly suggest the installation of stainless in the piping, located before the pump. This inexpensive measure will insure protection for both the pump and valve.

CONSTRUCTION

Bodies are cast from Class B iron in accordance with ASTM A126. Bronze parts in accordance with ASTM B62 and spring are stainless steel, ASTM A276 type 302.

CAUTION

Not suggested for installations in sewage ejector piping nor are they recommended for use with reciprocal compressors or pumps.

SPECIFICATION

- Designed and Manufacture: KISTLER Standard.
- Face to Face dimensions : ASME B16.1
  Pipe Flanges and Flanges ends : ASME B16.1

PERFORMANCE

Nominal Diameter (mm.)		2"(50mm.) - 12"(300mm.)
Max.Working Pressure		232 psi. (16 bar)
Max. Working Temperature		120°C
Test : Hydrostatic	Body	333 psi. (23 bar)
	Seat	232 psi. (16 bar)

DIMENSIONS

Unit : mm.

SIZE mm.	SIZE inch	L	Ø B	Ø D
50	2"	67	108	59
65	2.1/2"	73	127	80
80	3"	79	150	84
100	4"	102	174	112
125	5"	117	213	130
150	6"	140	248	164
200	8"	165	340	216
250	10"	210	406	245
300	12"	286	482	300

MATERIALS

No.	NAME OF PARTS	SPECIFICATION
1	Body	Cast Iron A126 Class B (FC200)
2	Guide	Stainless Steel (CF8M, SCS14A)
3	Disc	Stainless Steel (CF8M, SCS14A)
4,5	O-Ring, Seat ring	EPDM
6,7	Bolt, Sleeve	Stainless Steel (CF8M, SCS14A)
8	Spring	Stainless Steel (CF8M, SCS14A)

* Design, Dimensions and Materials are subject to change without notice. Copyright 2017 by APC INTERTRADE CO.,LTD.

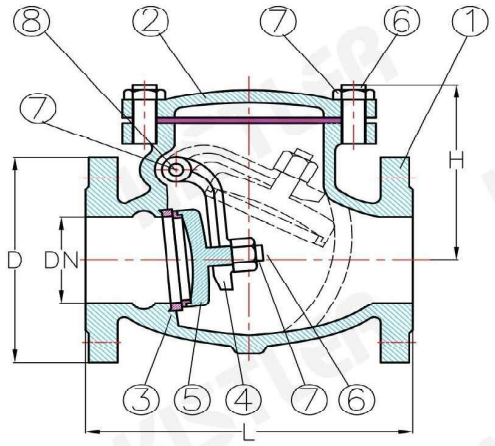

Fig. SCV-601 (ANSI150)
SCV-602 (JIS10K)
SCV-603 (PN10)
SCV-604 (PN16)



SPECIFICATION

- Designed and Manufacture : JIS B2031.
- Face to Face dimensions :
  ASME B16.10, JIS B2002.
- Pipe flange and flange ends :
  ASME B16.1, JIS B2210.

FEATURE AND APPLICATION

1. Swing type design.
2. Prevent reverse flow automatically designed.
3. Flange end connection.
4. For General and Industrial Service.
5. Water, Oil, Gas and Steam.
6. Body Epoxy Coating.

MATERIALS

NO.	NAME OF PARTS	SPECIFICATION
1	Body	Cast Iron (A126, FC200, GG25)
2	Bonnet	Cast Iron (A126, FC200, GG25)
3	Seat seal ring	Cast Bronze (B62) , SUS304 (CF8,SCS13)
4	Arm	Ductile Iron (A395, FCD450, GGG50)
5	Disc	Ductile Iron (A395, FCD450, GGG50)
6	Bolt	Carbon Steel (SS400)
7	Nut	Carbon Steel (SS400)
8	Pin	SUS304 (CF8, SCS13)

PERFORMANCE

Application	Max.Working Pressure & Temperature	Testing Pressure
Water & Oil	200 psi. (14 bar) 120°C	- Hydrostatic shell test 25bar
Gas	100 psi. (7 bar) 120°C	- Hydrostatic seat test 15bar
Saturated Steam	70 psi. (5 bar) 120°C	- Air test 6 bar

DIMENSIONS

Unit : mm.

SIZE inch.	H	L				JIS10K			ANSI150			PN10			PN16		
		JIS10K	ANS150	PN10	PN16	D	C	N	D	C	N	D	C	N	D	C	N
2"	127	203	203	203	203	155	120	4	152	121	4	165	125	4	165	125	4
2.1/2"	151	216	216	216	216	175	140	4	178	140	4	185	145	4	185	145	4
3"	165	241	241	241	241	185	150	8	191	152	4	200	160	8	200	160	8
4"	178	292	292	292	292	210	175	8	229	191	8	220	180	8	220	180	8
5"	205	356	330	356	356	250	210	8	254	216	8	250	210	8	250	210	8
6"	221	400	400	400	400	280	240	8	279	241	8	285	240	8	285	240	8
8"	249	495	495	495	495	330	290	12	343	299	8	340	295	8	340	295	12
10"	306	622	622	622	622	400	355	12	406	362	12	395	350	12	405	355	12
12"	405	698	698	698	698	445	400	16	483	432	12	445	400	12	460	410	12

Update 11/12/2023

* Design, Dimensions and Materials are subject to change without notice. Copyright 2017 by APC INTERTRADE CO.,LTD.

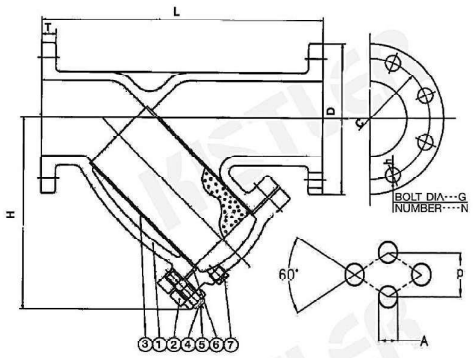

Fig. YS - 701 (ANSI150)
YS - 702 (JIS10K)
YS - 703 (PN10)
YS - 704 (PN16)



SPECIFICATION

- Designed and Manufacture JIS B2031
- Face to Face dimensions :
  ASME B16.10,JIS B2002
- Pipe flanges and flanges ends :
  ASME B16.1,JIS B22P

FEATURE AND APPLICATION

1. Y-Pattern Body Design and Bolted Cover.
2. Screen Stainless Steel and
   Flanged End Connections.
3. Cleaning of Screen without disassembling.
4. Easy maintenance Plug Drain.
5. Screen : hole dia 3mm.
6. For General and Industrial Service.
7. Water, Oil, Gas and Steam.

MATERIALS

NO.	NAME OF PARTS	SPECIFICATION
1	Body	Cast Iron (A126, FC200, GG25)
2	Cover	Cast Iron (A126, FC200, GG25)
3	Screen	SUS304 (CF8, SCS13, SUS304)
4,5	Cover bolt	Steel (A307 Grade B)
6	Gasket	Non-asbestos EPDM (option:Graphite)
7	Drain plug	Carbon Steel (SS400)

DATA OF SCREEN

DN	Ø A	P	THICKNESS
2"-5"	3.0	4.0	0.4
6"-8"	3.0	4.0	0.65
10" larger	3.0	4.0	0.8

PERFORMANCE

Application	Max.Working Pressure & Temperature	Testing Pressure
Water , Oil , Gas	200 psi. (14 bar) 120°C	- Hydrostatic shell test 25 bar
Saturated Steam	70 psi. (5 bar) 120°C	- Air test 6 bar

DIMENSIONS

Unit : mm.

SIZE	H			L			JIS10K			ANSI150			PN10			PN16		
inch.	JIS10K	ANSI150	PN10,16	JIS10K	ANSI150	PN10,16	D	C	N	D	C	N	D	C	N	D	C	N
2"	143	143	145	250	250	230	155	120	4	152	121	4	165	125	4	165	125	4
2.1/2"	162	162	170	285	285	290	175	140	4	178	140	4	185	145	4	185	145	4
3"	175	175	185	315	292	310	185	150	8	191	152	4	200	160	8	200	160	8
4"	220	220	210	370	352	350	210	175	8	229	191	8	220	180	8	220	180	8
5"	250	250	250	420	420	420	250	210	8	254	216	8	250	210	8	250	210	8
6"	290	290	290	490	490	490	280	240	8	279	241	8	285	240	8	285	240	8
8"	385	385	360	570	543	600	330	290	12	343	299	8	340	295	8	340	295	12
10"	438	438	430	680	660	730	400	355	12	406	362	12	395	350	12	405	355	12
12"	512	512	540	800	762	850	445	400	16	483	432	12	445	400	12	460	410	12

* Design, Dimensions and Materials are subject to change without notice. Copyright 2017 by APC INTERTRADE CO.,LTD.

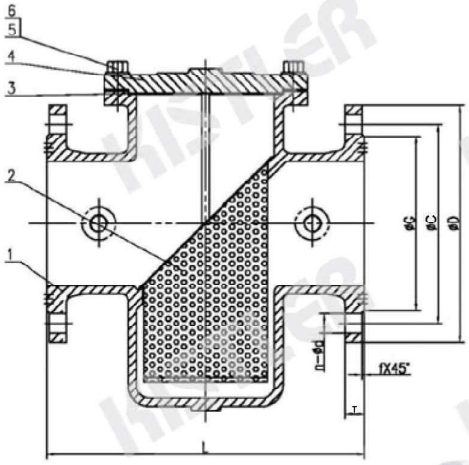

Fig. BS-102 (JIS10K)



SPECIFICATION

- Designed and Manufacture JIS B2031
- Face to Face dimensions :
  ASME B16.10,JIS B2002
- Pipe flanges and flanges ends :
  ASME B16.1,JIS B2212

FEATURE AND APPLICATION

1. T-Pattern Body Design and Bolted Cover.
2. Screen Stainless Steel and
   Flanges End Connections.
3. Cleaning of Screen without disassembling.
4. For General and Industrial Service.
5. Water, Oil, Gas and Steam.
6. Applicable Medium : Water, Oli, Gas and Steam
7. Working Pressure : 232 psi (16 bar)
8. Working Temperature : < 100°C
9. Screen : hold dia 1 mm. (60 mesh.)
10. Body Epoxy Coating

MATERIALS

NO.	NAME OF PARTS	SPECIFICATION
1	Body	Ductile Iron
2	Screen	Stainless Steel 316
3	Cover Gasket	EPDM
4	Cover	Ductile Iron
5	Bolt	Galvanized Steel
6	Bolt Nut	Galvanized Steel

TESTING PRESSURE

Hydrostatic	Shell Test	24 bar

DIMENSIONS

Unit : mm.

DN(mm)	SIZE INCH	L	D	C	G	T	f	n	d
50	2"	207	155	120	99	17	2	4	Ø19
65	2.1/2"	210	175	140	119	17	2	4	Ø19
80	3"	251	185	150	125	17	2	8	Ø19
100	4"	292	210	175	152	17	2	8	Ø19
125	5"	334	250	210	180	17	2	8	Ø23
150	6"	379	280	240	210	23	2	8	Ø23
200	8"	475	330	290	260	24	2.5	12	Ø23
250	10"	511	400	335	325	24	2.5	12	Ø25
300	12"	667	445	400	370	26	2.5	16	Ø25

* Design, Dimensions and Materials are subject to change without notice. Copyright 2017 by APC INTERTRADE CO.,LTD.

Fig. FV-801D (ANSI150)
FV-802D (JIS10K)
FV-803D (PN10)
FV-804D (PN16)

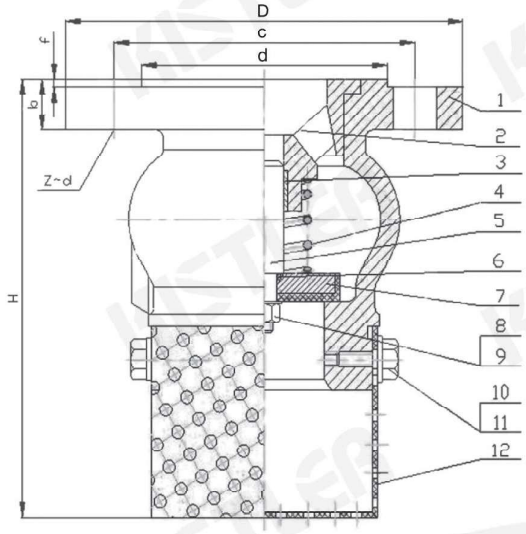

Ductile Iron, Epoxy powder coated body
Stainless steel strainer



PRESSURE TEMPERATURE RATINGS

Working Pressure	10 bar
Testing Pressure	16 bar
Service Temperature	80°C

TECHNICAL FEATURES

1. Operates in any position from horizontal to vertical ascending or oblique pipelines to allow flow in one direction.
2. Minimum head loss. silent, reliable sealing and various type available NBR/EPDM/VITON/PTFE.
3. Simple and robust-design suitable for general applications. Does not generate hammering.
4. Body Epoxy Coating

MATERIALS

NO.	NAME OF PARTS	SPECIFICATION
1	Body	Ductile Iron (A536, FCD450, GGG40)
2	Bonnet	Ductile Iron (A536, FCD450, GGG40)
3	Bush	Brass A124-C37700
4	Spring	Stainless Steel 304 (CF8, SCS13)
5	Guiding Stem	Stainless Steel 2CR13
6	O-Ring	NBR
7	Disc	NBR cover Ductile Iron
8,9,10,11	Nut,Washer	Stainless Steel 304 (CF8. SCS13)
12	Strainer	Stainless Steel 304 (CF8. SCS13)

DIMENSIONS

Unit : mm.

SIZE inch.	H	JIS10K			ANSI150			PN10			PN16		
		D	C	N	D	C	N	D	C	N	D	C	N
2"	170	155	120	4	152	121	4	165	125	4	165	125	4
2.1/2"	200	175	140	4	178	140	4	185	145	4	185	145	4
3"	220	185	150	8	191	152	4	200	160	8	200	160	8
4"	265	210	175	8	229	191	8	220	180	8	220	180	8
5"	300	250	210	8	254	216	8	250	210	8	250	210	8
6"	360	280	240	8	279	241	8	285	240	8	285	240	8
8"	470	330	290	12	343	299	8	340	295	8	340	295	12
10"	570	400	355	12	406	362	12	395	350	12	405	355	12
12"	655	445	400	16	483	432	12	445	400	12	460	410	12
14"	670	490	445	16	533	476	12	505	460	16	520	470	16
16"	710	560	510	16	597	540	16	565	515	16	580	525	16

* Design, Dimensions and Materials are subject to change without notice. Copyright 2017 by APC INTERTRADE CO.,LTD.

DUCTILE IRON VALVE, WITH LIFTING SHAFT

Epoxy powder coated body with Lifting Shaft, Stainless steel strainer, Spring Load Type

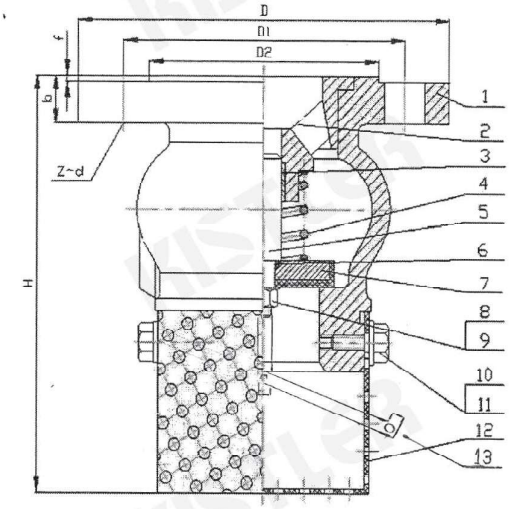

Fig. FV-801DL (ANSI150)
FV-802DL (JIS10K)
FV-803DL (PN10)
FV-804DL (PN16)



PRESSURE-TEMPERATURE RATINGS

Working Pressure	10 bar
Testing Pressure	16 bar
Service Temperature	80°C

TECHNICAL FEATURES

1.Operates in any position from horizontal to vertical ascending or oblique pipelines to allow flow in one direction.
2.Minimum head loss. silent, reliable sealing and various type available NBR/EPDM/VITON/PTFE.
3.Simple and robust-design suitable for general applications. Does not generate hammering.
4. Body Epoxy Coating.

MATERIALS

NO.	NAME OF PARTS	SPECIFICATION
1	Body	Ductile Iron (A536, FCD450, GGG40)
2	Bonnet	Ductile Iron (A536, FCD450, GGG40)
3	Bush	Brass A124-C37700
4	Spring	Stainless Steel 304 (CF8, SCS13)
5	Guiding Stem	Stainless Steel 2CR13
6	O-Ring	NBR
7	Disc	NBR cover Ductile Iron
8,9	Nut,Washer	Stainless Steel 304 (CF8, SCS13)
10,11	Nut,Washer	Stainless Steel 304 (CF8, SCS13)
12	Strainer	Stainless Steel 304 (CF8, SCS13)
13	Lifting Shaft	Stainless Steel 304 (CF8, SCS13)

*Standard = Carbon Steel Chain lenght Standard 5 meters
*Option = Stainless Steel Sling lenght Standard 5 meters

DIMENSIONS

Unit : mm.

SIZE inch.	H	JIS10K			ANSI150			PN10			PN16		
		D	C	N	D	C	N	D	C	N	D	C	N
2"	170	155	120	4	152	121	4	165	125	4	165	125	4
2.1/2"	200	175	140	4	178	140	4	185	145	4	185	145	4
3"	220	185	150	8	191	152	4	200	160	8	200	160	8
4"	265	210	175	8	229	191	8	220	180	8	220	180	8
5"	300	250	210	8	254	216	8	250	210	8	250	210	8
6"	360	280	240	8	279	241	8	285	240	8	285	240	8
8"	470	330	290	12	343	299	8	340	295	8	340	295	12
10"	570	400	355	12	406	362	12	395	350	12	405	355	12
12"	655	445	400	16	483	432	12	445	400	12	460	410	12
14"	670	490	445	16	533	476	12	505	460	16	520	470	16

* Design, Dimensions and Materials are subject to change without notice. Copyright 2017 by APC INTERTRADE CO.,LTD.

Fig. AV-13

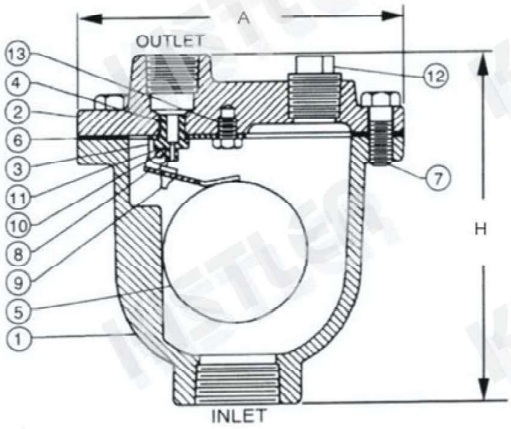



SPECIFICATION :

- Pipe Threaded ends in accordance with BSPT (BS21)

FEATURE :

- Screwed end BSPT Connections
- Float Type
- Ball Stainless Steel
- Orifice Cap Brass

APPLICATION :

- For General and Industrial Services
- Applicable Medium : Cold or Hot water & Oil
- Max working pressure : 16 bar (232 psi)
- Max working temperature : 80°C (NBR), 135°C (VITON)

INSTALLATION :

1. Install the valve vertically with allowance within 5°C from the vertical line
2. Prior to installation, remove forign matters remaining in piping and equipment
3. Install a stop valve at the inlet to stop flow during maintenance inspection
4. To provide for leakage of water by any change, extend pipe line from the outlet up to the drainage ditch
5. In case of any possibility of freezing, cover the valve body with heat insuation materials

MATERIALS

NO.	NAME OF PARTS	SPECIFICATION
1,2	Body, Cover	Ductile Iron
3,10	Lever Frame, Pivot Pin	Stainless Steel 304
4	Seat	Bronze
5	Float	Stainless Steel 304
6	Gasket	PTFE
13	Locator	Stainless Steel 304
8	Float Arm	Stainless Steel 304
9	Orifice Button	NBR, VITON
11	Pin Retainer	Stainless Steel
7,12	Cover Bolt, Pipe Plug	Stainless Steel , Steel

DIMENSIONS

Unit : mm.

SIZE	A	H	INLET	OUTLET
1/2"	125	145	1/2"	1/4"
3/4"	125	145	3/4"	1/4"
1"	125	145	1"	1/4"

DESCRIPTION :

- Air Vent Valve is a universal type with large venting capcity. It can be used up to 16 bar. Large working pressure range than that of the conventional air vents offers wide range of use from low pressure to high pressure.
- Anti - corrosion treatment provided to the inside prevents the valve from rusting. As the disc free operating construction air tightness is superior.

* Design, Dimensions and Materials are subject to change without notice. Copyright 2019 by APC INTERTRADE CO.,LTD.

BALL VALVE 1-PIECE (Reduce Bore)

Threaded : BSPT

Materials : SUS304 / Gr. CF8

Application : Water, Oil, Gas

Features : - Investment Casting Body
- Working Pressure 1000 psi.
- Hydrostatic Test Pressure 1500 psi.
- Temperature Range -10°C to 100°C
- Adjustable Stem Packing
- Pure Teflon Seals and Seats
- Blow-Out Proof Stem
- Locking Device (Optional)

Fig. BV-1RS04



MATERIALS

NO.	NAME OF PART	SPECIFICATION
1	Body	SUS304 (CF8, SCS13)
2	Ball	SUS304 (CF8, SCS13)
3	Seat	PTFE (TEFLON)
4	Washer	SUS304 (CF8, SCS13)
5	Insert	SUS304 (CF8, SCS13)
6	Thrust Washer	PTFE (TEFLON)
7	Stem	SUS304 (CF8, SCS13)
8	Stem Packing	PTFE (TEFLON)
9	Gland	SUS304 (CF8, SCS13)
10	Spring Washer	SUS304 (CF8, SCS13)
11	Nut	SUS304 (CF8, SCS13)
12	Handle	SUS304 (CF8, SCS13)
13	Handle Cover	PVC

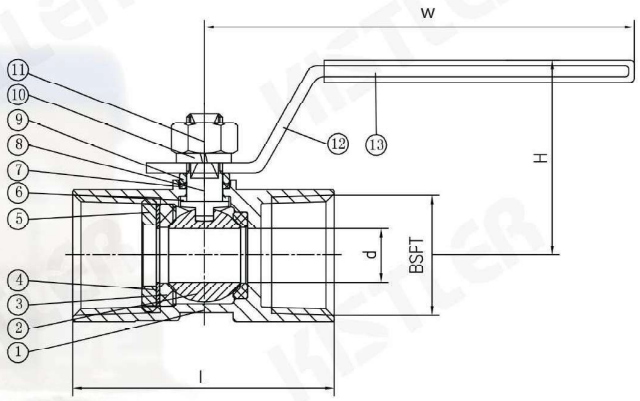

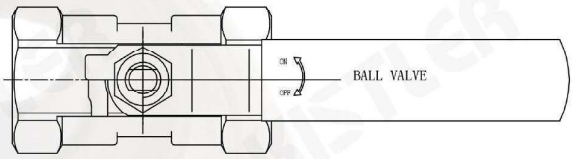

DIMENSIONS

Unit : mm.

SIZE	d	L	H	W
1/4"	5	40	25	72
3/8"	7	44	30	82
1/2"	9	51	36	88
3/4"	12	54	42	96
1"	15	63	45	110
1.1/4"	20	70	52	110
1.1/2"	25	77	60	136
2"	32	90	65	150

* Design, Dimensions and Materials are subject to change without notice. Copyright 2010 by APC INTERTRADE CO.,LTD.

BALL VALVE 2-PIECE (Full Bore)

Threaded : BSPT

Materials : SUS304 / Gr. CF8

Application : Water, Oil, Gas

Features :
- Investment Casting Body
- Working Pressure 1000 psi.
- Hydrostatic Test Pressure 1500 psi.
- Temperature Range -10°C to 100°C
- Adjustable Stem Packing
- Pure Teflon Seals and Seats
- Blow-Out Proof Stem
- Locking Device

Fig. BV-2FS04



MATERIALS

NO.	NAME OF PART	SPECIFICATION
1	Body	SUS304 (CF8, SCS13)
2	Cap	SUS304 (CF8, SCS13)
3	Ball	SUS304 (CF8, SCS13)
4	Seat	PTFE (TEFLON)
5	Joint Gasket	PTFE (TEFLON)
6	Thrust Washer	PTFE (TEFLON)
7	Packing	PTFE (TEFLON)
8	Gland Bush	SUS304 (CF8, SCS13)
9	Stem	SUS304 (CF8, SCS13)
10	Washer	SUS304 (CF8, SCS13)
11	Nut	SUS304 (CF8, SCS13)
12	Lock	SUS304 (CF8, SCS13)
13	Handle	SUS304 (CF8, SCS13)
14	Handle Cover	PVC

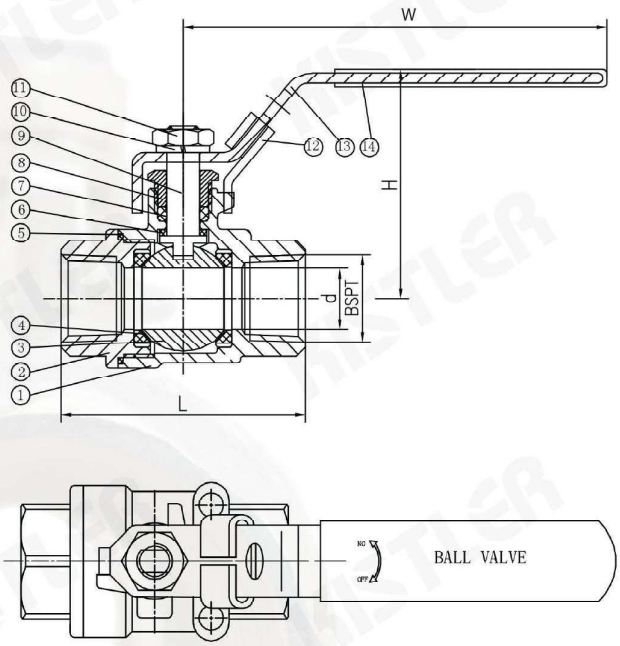

DIMENSIONS

Unit : mm.

SIZE	d	L	H	W
1/4"	8	56	55	97
3/8"	10	56	55	97
1/2"	15	55	57	105
3/4"	20	62	57	111
1"	25	75	68	113
1.1/4"	32	81	80	130
1.1/2"	38	97	90	135
2"	49	105	95	151
2.1/2"	65	150	130	204
3"	80	175	140	246

* Design, Dimensions and Materials are subject to change without notice. Copyright 2010 by APC INTERTRADE CO.,LTD.

BALL VALVE 3-PIECE (Full Bore)

Threaded : BSPT
Materials : SUS304 / Gr. CF8
Application : Water, Oil, Gas
Features : - Investment Casting Body
- Working Pressure 1/4"- 2" 1000 psi., 2.1/2"- 4" 800 psi.
- Hydrostatic Test Pressure 1/4"- 2" 1500 psi.
2.1/2"- 4" 1200 psi.
- Temperature Range -10°C to 100°C
- Adjustable Stem Packing
- Pure Teflon Seals and Seats
- Blow-Out Proof Stem
- Locking Device

Fig. BV-3FS04



MATERIALS

NO.	NAME OF PART	SPECIFICATION
1	Body	SUS304 (CF8, SCS13)
2	Cap	SUS304 (CF8, SCS13)
3	Ball	SUS304 (CF8, SCS13)
4	Seat	PTFE (TEFLON)
5	Thrust Washer	PTFE (TEFLON)
6	Packing	PTFE (TEFLON)
7	Gland Bush	SUS304 (CF8, SCS13)
8	Stem	SUS304 (CF8, SCS13)
9	Washer	SUS304 (CF8, SCS13)
10	Nut	SUS304 (CF8, SCS13)
11	Washer	SUS304 (CF8, SCS13)
12	Nut	SUS304 (CF8, SCS13)
13	Bolt	SUS304 (CF8, SCS13)
14	Lock	SUS304 (CF8, SCS13)
15	Handle	SUS304 (CF8, SCS13)
16	Handle Cover	PVC

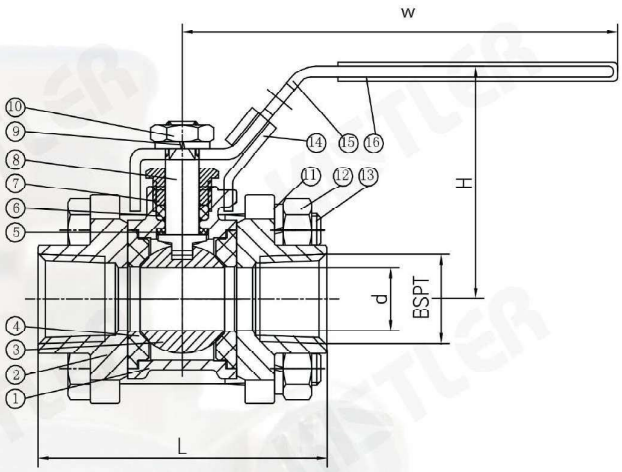

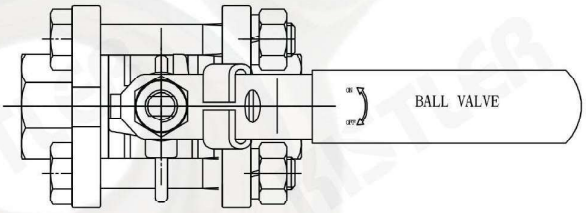

DIMENSIONS

Unit : mm.

SIZE	d	L	H	W
1/4"	8	62	53	96
3/8"	10	62	53	96
1/2"	15	60	54	102
3/4"	20	70	60	112
1"	25	80	75	128
1.1/4"	32	90	80	124
1.1/2"	38	102	95	151
2"	50	120	95	167
2.1/2"	65	170	140	204
3"	80	185	150	225
4"	100	228	168	503

* Design, Dimensions and Materials are subject to change without notice. Copyright 2010 by APC INTERTRADE CO.,LTD.

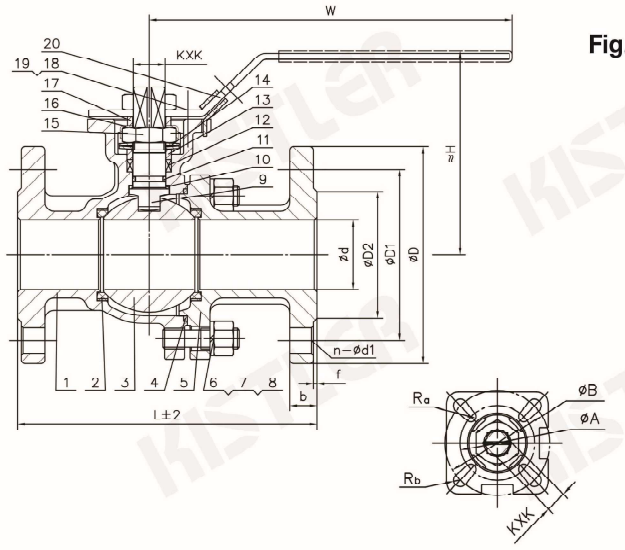

Fig. BV-2FJ



FEATURES :

- Design and manufacture : JIS B2071 B2081
- Flange Dimension : JIS B2212
- Face to Face : JIS B2002
- Test & Inspection : JIS 2003
- Working Temperature Range : -20°C - 100°C
- Working Pressure 200 psi

TEST PRESSURE :

SHELL (BY WATER)		2.1 MPa 21.5kg/cm²
SEAT	BY WATER	1.6 MPa 16.5kg/cm²
	BY AIR	0.6 MPa 6kg/cm²

MATERIALS

NO.	NAME OF PARTS	MATERIAL
1	Body	Stainless Steel 304
2	Seat	PTFE
3	Ball	Stainless Steel 304
4	Gasket	PTFE
5	Bonnet	Stainless Steel 304
6	Bolt	Stainless Steel 304
7	Spring Washer	Stainless Steel 304
8	Nut	Stainless Steel 304
9	Stem	Stainless Steel 304
10	Stem Washer	PTFE + 25% GF
11	O-ring	FPM
12	Packing	PTFE
13	Gland	Stainless Steel 304
14	Disc Spring	Stainless Steel 304
15	Nut	Stainless Steel 304
16	Crown Washer	Stainless Steel 304
17	Washer	Stainless Steel 304
18	Hex Socket Bolt	Stainless Steel 304
19	Nut	Stainless Steel 304
20	Handle	Stainless Steel + PVC

DIMENSIONS

Unit : mm.

SIZE	L	d	D2	D1	D	f	N-ød1	H	W	a	b	A	B	KXK	Nm.
1/2"	108	15	51	70	95	1	4-15	81	135	3.0	3.0	36	42	9x9	10
3/4"	117	20	56	75	100	1	4-15	86	135	3.0	3.0	36	42	9x9	13
1"	127	25	67	90	125	1	4-19	93	160	3.5	3.5	42	50	11x11	15
1.1/4"	140	32	76	100	135	2	4-19	103	160	3.5	3.5	42	50	11x11	20
1.1/2"	165	40	81	105	140	2	4-19	115	195	4.5	4.5	50	70	14x14	25
2"	178	50	96	120	155	2	4-19	125	195	4.5	4.5	50	70	14x14	35
2.1/2"	190	65	116	140	175	2	4-19	145	285	5.5	5.5	70	102	17x17	50
3"	203	80	126	150	185	2	4-19	152	320	5.5	5.5	70	102	17x17	70
4"	229	100	151	175	210	2	4-19	179	320	5.5	5.5	70	102	17x17	90
6"	396	150	210	240	283	3	8-22	245	490	10.5	12.5	102	120	27x27	150

* Design, Dimensions and Materials are subject to change without notice. Copyright 2018 by APC INTERTRADE CO.,LTD.

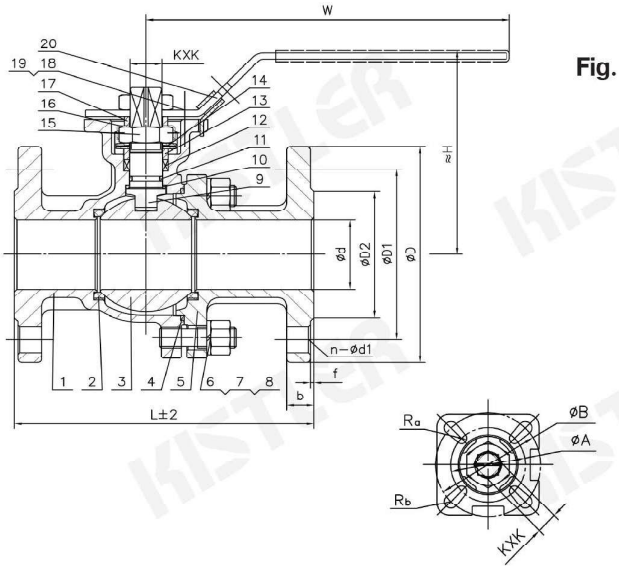

Fig. BV-2FA



FEATURES :

- Design and manufacture : ANSI B16, B10
- Flange Dimension : ANSI B16, 5
- Face to Face : ANSI 16, 34
- Test & Inspection : API 598
- Working Temperature Range : -20°C - 100°C
- Working Pressure 200 psi

TEST PRESSURE :

SHELL (BY WATER)		2.1 MPa 21.5kg/cm²
SEAT	BY WATER	1.6 MPa 16.5kg/cm²
	BY AIR	0.6 MPa 6kg/cm²

MATERIALS

NO.	NAME OF PARTS	MATERIAL
1	Body	Stainless Steel 304
2	Seat	PTFE
3	Ball	Stainless Steel 304
4	Gasket	PTFE
5	Bonnet	Stainless Steel 304
6	Bolt	Stainless Steel 304
7	Spring Washer	Stainless Steel 304
8	Nut	Stainless Steel 304
9	Stem	Stainless Steel 304
10	Stem Washer	PTFE + 25% GF
11	O-ring	FPM
12	Packing	PTFE
13	Gland	Stainless Steel 304
14	Disc Spring	Stainless Steel 304
15	Nut	Stainless Steel 304
16	Crown Washer	Stainless Steel 304
17	Washer	Stainless Steel 304
18	Hex Socket Bolt	Stainless Steel 304
19	Nut	Stainless Steel 304
20	Handle	Stainless Steel + PVC

DIMENSIONS

Unit : mm.

SIZE	L	d	D2	D1	D	f	N-ød1	H	W	a	b	A	B	KXK	Nm.
1/2"	108	15	35	60	90	2	4-16	81	135	3.0	3.0	36	42	9x9	10
3/4"	117	20	43	69.9	100	2	4-16	86	135	3.0	3.0	36	42	9x9	13
1"	127	25	51	79.4	110	2	4-16	93	160	3.0	3.5	42	50	11x11	15
1.1/4"	140	32	63.5	88.9	115	2	4-16	103	160	3.0	3.5	42	50	11x11	20
1.1/2"	165	40	73	98.4	125	2	4-16	115	195	3.5	4.5	50	70	14x14	25
2"	178	50	92	120.7	150	2	4-19	125	195	3.5	4.5	50	70	14x14	35
2.1/2"	190	65	105	139.7	180	2	4-19	145	285	4.5	5.5	70	102	17x17	50
3"	203	80	127	152.4	190	2	4-19	152	320	4.5	5.5	70	102	17x17	70
4"	229	100	157	190.5	230	2	8-19	179	320	5.5	5.5	70	102	17x17	90

* Design, Dimensions and Materials are subject to change without notice. Copyright 2018 by APC INTERTRADE CO.,LTD.

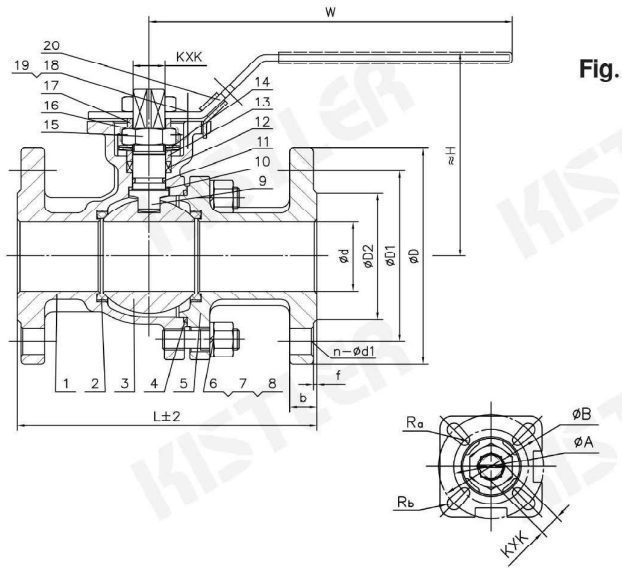

Fig. BV-2FP16



FEATURES :

Design and manufacture : DIN 3202 F4 / F5
- Flange Dimension : PN16 DIN 2633
- Face to Face : ASME B16.34
- Test & Inspection : EN 12266-1
- Working Temperature Range : -20°C - 100°C
- Working Pressure 200 psi

TEST PRESSURE :

SHELL (BY WATER)		2.1 MPa 21.5kg/cm²
SEAT	BY WATER	1.6 MPa 16.5kg/cm²
	BY AIR	0.6 MPa 6kg/cm²

MATERIALS

NO.	NAME OF PARTS	MATERIAL
1	Body	Stainless Steel 304
2	Seat	PTFE
3	Ball	Stainless Steel 304
4	Gasket	PTFE
5	Bonnet	Stainless Steel 304
6	Bolt	Stainless Steel 304
7	Spring Washer	Stainless Steel 304
8	Nut	Stainless Steel 304
9	Stem	Stainless Steel 304
10	Stem Washer	PTFE + 25% GF
11	O-ring	FPM
12	Packing	PTFE
13	Gland	Stainless Steel 304
14	Disc Spring	Stainless Steel 304
15	Nut	Stainless Steel 304
16	Crown Washer	Stainless Steel 304
17	Washer	Stainless Steel 304
18	Hex Socket Bolt	Stainless Steel 304
19	Nut	Stainless Steel 304
20	Handle	Stainless Steel + PVC

DIMENSIONS

Unit : mm.

SIZE	L	d	D2	D1	D	f	N-ød1	H	W	a	b	A	B	KXK	Nm.
1/2"	115	15	45	65	95	2	4-14	81	135	3.0	3.0	36	42	9x9	10
3/4"	120	20	58	75	105	2	4-14	86	135	3.0	3.0	36	42	9x9	13
1"	125	25	68	85	115	2	4-14	93	160	3.0	3.5	42	50	11x11	15
1.1/4"	130	32	78	100	140	2	4-18	105	160	3.0	3.5	42	50	11x11	20
1.1/2"	140	40	88	110	150	3	4-18	115	195	3.5	4.5	50	70	14x14	25
2"	150	50	102	125	165	3	4-18	121	195	3.5	4.5	50	70	14x14	35
2.1/2"	170	65	122	145	185	3	4-18	150	285	4.5	5.5	70	102	17x17	50
3"	180	80	138	160	200	3	8-18	161	320	4.5	5.5	70	102	17x17	70
4"	190	100	158	180	220	3	8-18	191	320	5.5	6.5	102	125	22x22	90

Update 16/10/2023

* Design, Dimensions and Materials are subject to change without notice. Copyright 2018 by APC INTERTRADE CO.,LTD.

GLOBE VALVE

Threaded : BSPT

Materials : SUS304 / Gr.CF8

Application : Water, Oil, Gas

Features :
- Investment Casting Body
- Working Pressure 200 psi.
- Temperature Range -10°C to 100°C
- Solid Wedge Disc, Integral Seat
- Adjustable Stem Packing
- Rising Stem and Hand Wheel



Fig. GB-200S04

MATERIALS

NO.	NAME OF PART	SPECIFICATION
1	Body	SUS304 (CF8, SCS13)
2	Disc	SUS304 (CF8, SCS13)
3	Bonnet	SUS304 (CF8, SCS13)
4	Gasket	PTFE (TEFLON)
5	Gasket	SUS304 (CF8, SCS13)
6	Packing	PTFE (TEFLON)
7	Gland	SUS304 (CF8, SCS13)
8	Cap Nut	SUS304 (CF8, SCS13)
9	Stem	SUS304 (CF8, SCS13)
10	Hand Wheel	ALUMINIUM
11	Name Plate	ALUMINIUM
12	Stem Nut	SUS304 (CF8, SCS13)

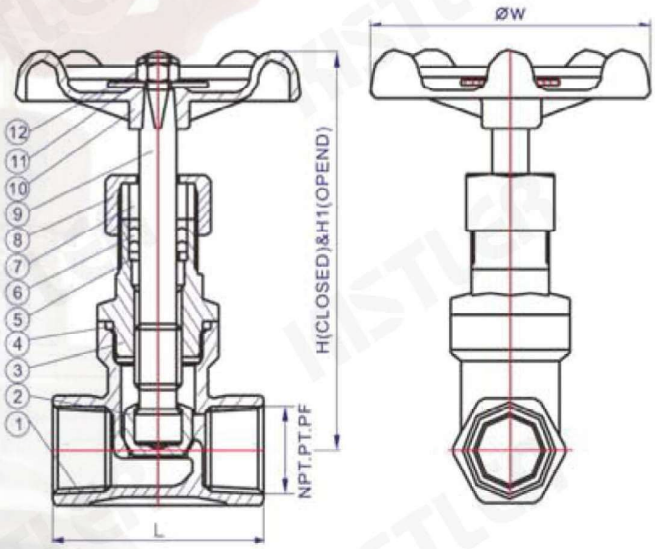

DIMENSIONS

Unit : mm.

SIZE	L	H	H1	W
1/4"	52	95	106	70
3/8"	52	95	106	70
1/2"	66	89	98	64
3/4"	61	90	114	64
1"	86	98	109	72
1.1/4"	99	119	135	95
1.1/2"	114	120	147	95
2"	133	140	155	95

* Design, Dimensions and Materials are subject to change without notice. Copyright 2010 by APC INTERTRADE CO.,LTD.

GATE VALVE

Threaded : BSPT

Materials : SUS304 / Gr.CF8

Application : Water, Oil, Gas

Features :
- Investment Casting Body
- Working Pressure 200 psi.
- Temperature Range -10°C to 100°C
- Solid Wedge Disc, Integral Seat
- Adjustable Stem Packing
- Non-Rising Stem and Hand Wheel

Fig. GV-200S04



MATERIALS

NO.	NAME OF PART	SPECIFICATION
1	Body	SUS304 (CF8, SCS13)
2	Disc	SUS304 (CF8, SCS13)
3	Stem	SUS304 (CF8, SCS13)
4	Cap	SUS304 (CF8, SCS13)
5	Joint Gasket	PTFE (TEFLON)
6	Insert	SUS304 (CF8, SCS13)
7	Stem Packing	PTFE (TEFLON)
8	Gland	SUS304 (CF8, SCS13)
9	Cap Nut	SUS304 (CF8, SCS13)
10	Hand Wheel	ALUMINIUM
11	Name Plate	ALUMINIUM
12	Washer	SUS304 (CF8, SCS13)
13	Nut	SUS304 (CF8, SCS13)

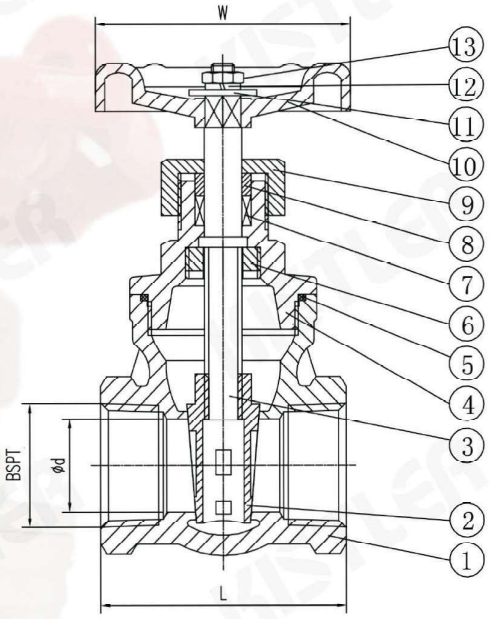

DIMENSIONS

Unit : mm.

SIZE	d	L	H	W
1/4"	10	55	100	70
3/8"	12	60	107	70
1/2"	15	52	92	64
3/4"	20	57	100	64
1"	25	62	110	71
1.1/4"	32	70	120	78
1.1/2"	38	72	135	95
2"	50	85	156	97

* Design, Dimensions and Materials are subject to change without notice. Copyright 2010 by APC INTERTRADE CO.,LTD.

SWING CHECK VALVE

Threaded : BSPT

Materials : SUS304 / Gr.CF8

Application : Water, Oil, Gas

Features : - Investment Casting Body
- Working Pressure 200 psi.
- Temperature range -10°C to 100°C
- Solid Wedge Disc

Fig. CV-200S04



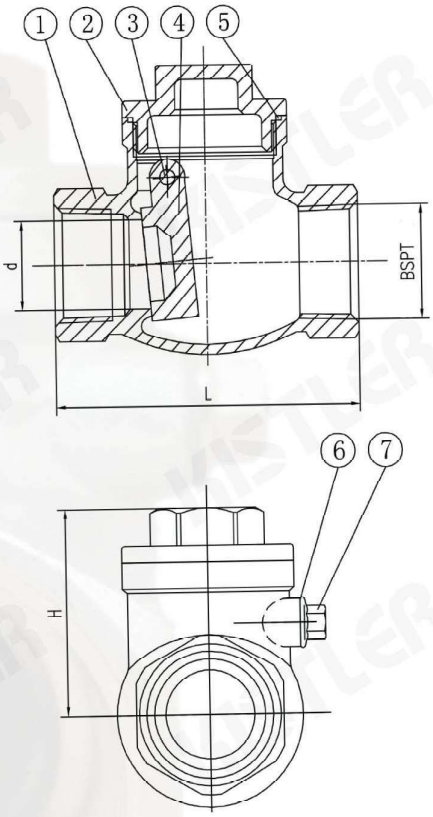

MATERIALS

NO.	NAME OF PART	SPECIFICATION
1	Body	SUS304 (CF8, SCS13)
2	Cap	SUS304 (CF8, SCS13)
3	Pin	SUS304 (CF8, SCS13)
4	Disc	SUS304 (CF8, SCS13)
5	Joint Gasket	PTFE (TEFLON)
6	Gasket	PTFE (TEFLON)
7	Screw	SUS304 (CF8, SCS13)

PRESSURE - TEMPERATURE RATINGS

Working Pressure	200 psi
Working Temperature	-10 to 100°C

DIMENSIONS

Unit : mm.

SIZE	d	L	H	D
1/4"	8	65	43	47
3/8"	10	65	43	47
1/2"	15	63	43	41
3/4"	20	75	48	50
1"	25	85	51	52
1.1/4"	32	101	55	70
1.1/2"	40	116	60	71
2"	50	135	76	78
2.1/2"	65	181	99	104
3"	80	200	104	152

* Design, Dimensions and Materials are subject to change without notice. Copyright 2017 by APC INTERTRADE CO.,LTD.

SPRING CHECK VALVE

Threaded : BSPT

Materials : SUS304 / Gr.CF8

Application : Water, Oil, Gas

Features : - Investment Casting Body

- Working Pressure 800 psi.

- Temperature Range -10°C to 100°C

Fig. CV-800S04



MATERIALS

NO.	NAME OF PART	SPECIFICATION
1	Body	SUS304 (CF8, SCS13)
2	Spring	SUS304 (CF8, SCS13)
3	Disc	SUS304 (CF8, SCS13)
4	Seal	SUS304 (CF8, SCS13)
5	Gasket	PTFE (TEFLON)

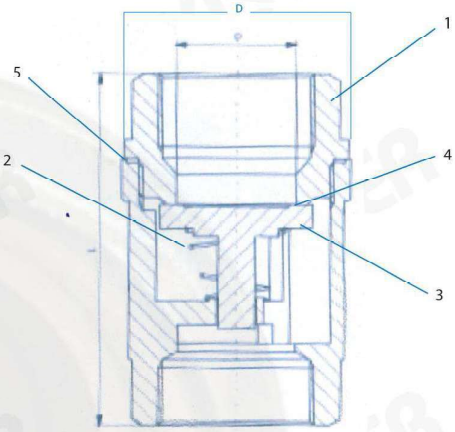

PRESSURE - TEMPERATURE RATINGS

Working Pressure	800 psi
Working Temperature	-10 to 100°C

DIMENSIONS

Unit : mm.

SIZE	G	L	D
1/2"	15	60	34
3/4"	20	63	41
1"	25	76	46
1.1/4"	32	87	57
1.1/2"	40	99	67
2"	50	109	80

* Design, Dimensions and Materials are subject to change without notice. Copyright 2018 by APC INTERTRADE CO.,LTD.

Y-STRAINER

Threaded : BSPT

Materials : SUS304 / Gr.CF8

Application : Water, Oil, Gas

Features : - Investment Casting Body
- Working Pressure 800psi.
- Temperature Range -10°C to 100°C
- Standad Strainer 80 Mesh

Fig. YST-800S04



MATERIALS

NO.	NAME OF PART	SPECIFICATION
1	Body	SUS304 (CF8, SCS13)
2	Screen	SUS304 (CF8, SCS13)
3	Gasket	PTFE (TEFLON)
4	Cap	SUS304 (CF8, SCS13)

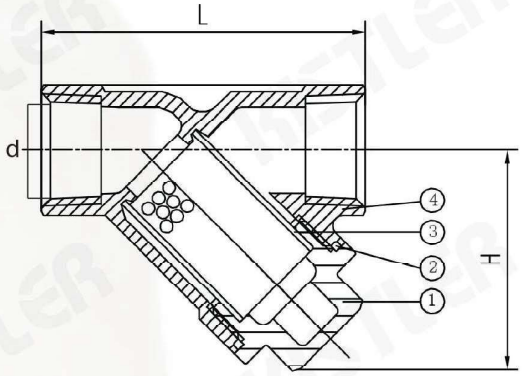

PRESSURE -TEMPERATURE RATINGS

Working Pressure	800 psi
Working Temperature	-10 to 100°C

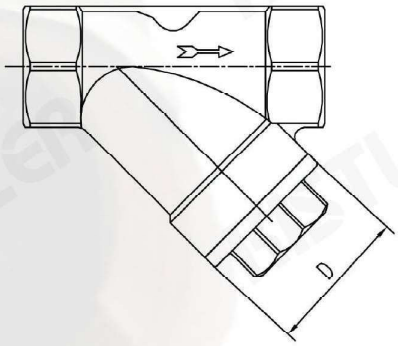

DIMENSIONS

Unit : mm.

SIZE	d	L	H	D
1/4"	10	65	43	47
3/8"	12	65	43	47
1/2"	15	62	43	30
3/4"	20	74	50	35
1"	25	88	61	43
1.1/4"	32	100	68	47
1.1/2"	40	108	73	54
2"	50	138	92	65
2.1/2"	65	165	118	83
3"	80	200	104	152

* Design, Dimensions and Materials are subject to change without notice. Copyright 2018 by APC INTERTRADE CO.,LTD.

APPLICATION

Foot valve is basically a check valve fitted to the end of a suction pipe leading to a pump. Its purpose to keep fluid tapped in the suction pipe when the pump stops, thus maintaining a suitable prime for the pump. When the pump restarts, the suction created opens the valve. giving full flow to the pump inlet.

TECHNICAL FEATURES :

1. Operates in any position from horizontal to vertical ascending or oblique pipelines to allow flow in one direction.
2. Minimum head loss.
3. Silent and reliable sealing.
4. Simple and robust design suitable for general applications.
5. Does not generate hammering.
6. The return spring ensures that the Foot Valve work in any position.
7. Closing system, long back axial guiding for reduces displacement.

Fig. FVSS (Screwed End.)



PERFORMANCE

Working Pressure	10 bar
Testing Pressure	16 bar
Service Temperature	NR 80°C
	VITON 200°C
	SUS304 300°C

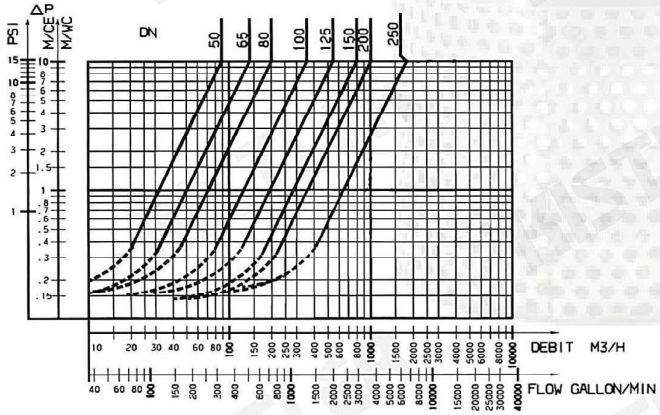

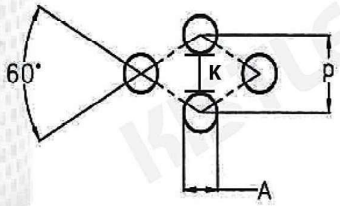

DIMENSIONS

Unit : mm.

SIZE	DN	Height	Outside Dia	A	P	K	Approx. W/kg.
1"	25	135	68	3	5	2	1
1.1/2"	40	162	76	3	5	2	1.2
2"	50	190	90	3	5	2	1.8
2.1/2"	65	230	115	3	5	2	3
3"	80	250	140	6.5	9.5	3	5
4"	100	310	165	6.5	9.5	3	7

MATERIALS

NAME OF PART	SPECIFICATION
Body & Disc	Stainless Steel 304 (CF8, SCS13)
Stem	Stainless Steel 304 (CF8, SCS13)
Seat	NR / VITON / Stainless Steel 304
Spring	Stainless Steel 304 (CF8, SCS13)
Strainer	Stainless Steel 304 (CF8, SCS13)

* Design, Dimensions and Materials are subject to change without notice. Copyright 2018 by APC INTERTRADE CO.,LTD.

APPLICATION

Foot valve is basically a check valve fitted to the end of a suction pipe leading to a pump. Its purpose to keep fluid tapped in the suction pipe when the pump stops, thus maintaining a suitable prime for the pump. When the pump restarts, the suction created opens the valve. giving full flow to the pump inlet.

Fig. FVS-901 (ANSI150)
FVS-902 (JIS10K)
FVS-903 (PN10)
FVS-904 (PN16)



TECHNICAL FEATURES :

1. Operates in any position from horizontal to vertical ascending or oblique pipelines to allow flow in one direction.
2. Minimum head loss.
3. Silent and reliable sealing.
4. Simple and robust design suitable for general applications.
5. Does not generate hammering.
6. The return spring ensures that the Foot Valve work in any position.
7. Closing system, long back axial guiding for reduces displacement.

PERFORMANCE

Working Pressure	10 bar
Testing Pressure	16 bar
Service Temperature	NR 80°C
	VITON 200°C
	SUS304 300°C

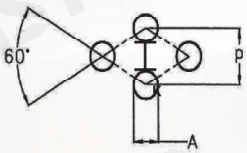

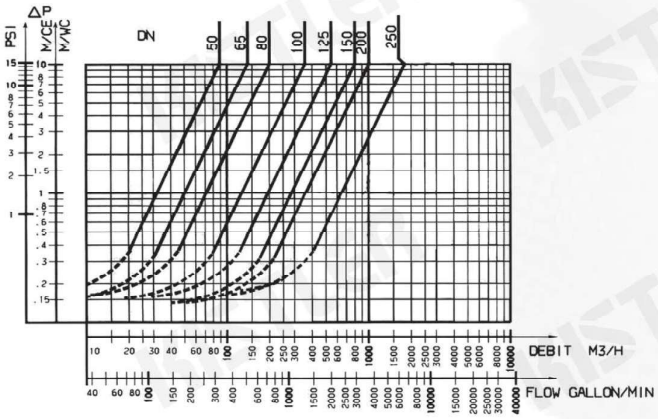

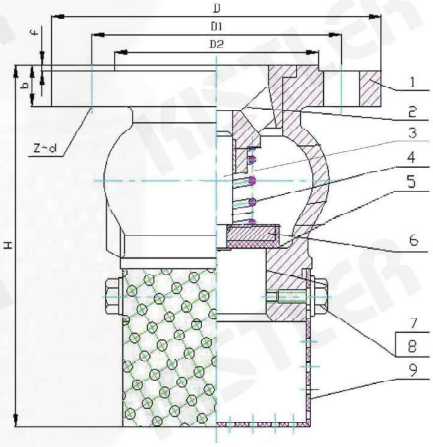

DIMENSIONS

Unit : mm.

SIZE	DN	Height	A	P	K	Approx. W/kg.
1.1/2"	40	145	3	5	2	3
2"	50	180	3	5	2	4
2.1/2"	65	225	3	5	2	6
3"	80	260	6.5	9.5	3	7
4"	100	300	6.5	9.5	3	10
5"	125	355	10	14	4	16
6"	150	360	10	14	4	18
8"	200	450	10	14	4	25
10"	250	550	10	14	4	45
12"	300	640	10	14	4	60
14"	350	660	10	14	4	68
16"	400	660	10	14	4	75
18"	450	680	10	14	4	90

MATERIALS

NO.	NAME OF PART	SPECIFICATION
1	Body	Stainless Steel 304 (CF8)
2	Bonnet	Stainless Steel 304 (CF8)
3	Guiding Stem	Stainless Steel 304 (CF8)
4	Spring	Stainless Steel 304 (CF8)
5	Seat	NR / VITON / Stainless Steel 304 (CF8)
6	Disc	Stainless Steel 304 (CF8)
7	Nut	Stainless Steel 304 (CF8)
8	Washer	Stainless Steel 304 (CF8)
9	Strainer	Stainless Steel 304 (CF8)

* Design, Dimensions and Materials are subject to change without notice. Copyright 2018 by APC INTERTRADE CO.,LTD.

Fig. DCV - 603S

Flange Connections : UNI Standard JIS10K, ANSI125/150, PN10/16

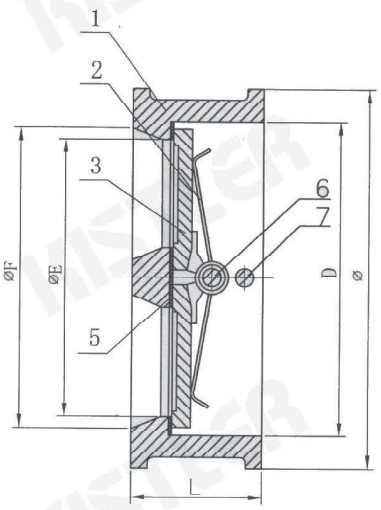



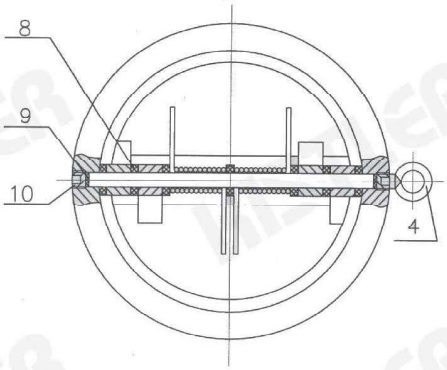

Specification Standards :

- Designed as standard : BS5155, DIN3202, ISO5752
- Flange as Steandard : DIN, BS, UNI, ISO, ANSI, JIS

Features :

- Wafer type connections
- The valve are designed to preverse flow automatically

Application :

- For general and industrial services
- Applicable medium : water, light oli

PERFORMANCE

Working Pressure	16 bar (232psi.)
Maximum Pressure	16 bar (232psi.)
Shell Test Pressure	21 bar (304psi.)
Applicable Temperature	-20℃ - 135℃

* Max Temperature 180℃ at Working Pressure 10 Bar

MATERIALS

NO.	NAME OF PARTS	SPECIFICATION
1	Body	SUS304 (CF8), SUS316 (CF8M)
2	Spring	SUS304 (CF8), SUS316 (CF8M)
3	Disc	SUS304 (CF8), SUS316 (CF8M)
4	Ring	WCB
5	Seat	VITON
6	Shaft 1	SUS304 (CF8), SUS316 (CF8M)
7	Shaft 2	SUS304 (CF8), SUS316 (CF8M)
8	Gasket	PTFE
9	Gasket	EPDM
10	Stub Screw	SUS304 (CF8), SUS316 (CF8M)

DIMENSIONS

Unit : mm.

SIZE inch (DN),d mm.	2" 50	2.1/2" 65	3" 80	4" 100	5" 125	6" 150	8" 200	10" 250	12" 300	14" 350	16" 400	18" 450	20" 500
L	54	54	57	64	70	75	95	108	143	127	140	152	152
D	65	80	94	117	145	170	224	265	312	360	410	450	505
E	44	54	69	86	109	128	179	224	268	438	483	538	593
F	55	64	85	106	126	155	203	265	340	-	-	-	-
Ø	101	120	133	168	194	219	276	337	400	-	-	-	-

* Design, Dimensions and Materials are subject to change without notice. Copyright 2017 by APC INTERTRADE CO.,LTD.

BALL VALVE 1-PIECE (Reduce Bore)

Threaded : BSPT

Materials : SUS316 / Gr. CF8M

Application : Water, Oil, Gas

Features : - Investment Casting Body
- Working Pressure 1000 psi.
- Hydrostatic Test Pressure 1500 psi.
- Temperature Range -10°C to 100°C
- Adjustable Stem Packing
- Pure Teflon Seals and Seats
- Blow-Out Proof Stem
- Locking Device (Optional)

Fig. BV-1R



MATERIALS

NO.	NAME OF PART	SPECIFICATION
1	Body	SUS316 (CF8M, SCS14)
2	Ball	SUS316 (CF8M, SCS14)
3	Seat	PTFE (TEFLON)
4	Washer	SUS304 (CF8, SCS13)
5	Insert	SUS304 (CF8, SCS13)
6	Thrust Washer	PTFE (TEFLON)
7	Stem	SUS316 (CF8M, SCS14)
8	Stem Packing	PTFE (TEFLON)
9	Gland	SUS304 (CF8, SCS13)
10	Spring Washer	SUS304 (CF8, SCS13)
11	Nut	SUS304 (CF8, SCS13)
12	Handle	SUS304 (CF8, SCS13)
13	Handle Cover	PVC

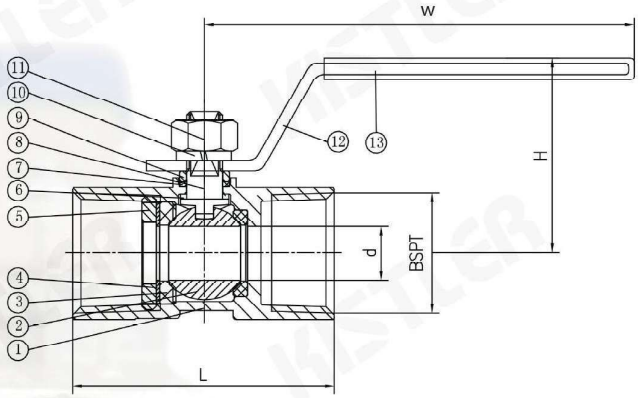

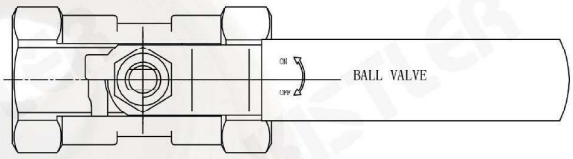

DIMENSIONS

Unit : mm.

SIZE	d	L	H	W
1/4"	5	40	25	72
3/8"	7	44	30	82
1/2"	9	55	36	88
3/4"	12	57	42	96
1"	15	68	47	110
1.1/4"	20	76	52	127
1.1/2"	25	82	60	140
2"	32	96	65	150

* Design, Dimensions and Materials are subject to change without notice. Copyright 2018 by APC INTERTRADE CO.,LTD.

BALL VALVE 2-PIECE (Full Bore)

Threaded : BSPT

Materials : SUS316 / Gr. CF8M

Application : Water, Oil, Gas

Features : - Investment Casting Body
- Working Pressure 1000 psi.
- Hydrostatic Test Pressure 1500 psi.
- Temperature Range -10°C to 100°C
- Adjustable Stem Packing
- Pure Teflon Seals and Seats
- Blow-Out Proof Stem
- Locking Device

Fig. BV-2F



MATERIALS

NO.	NAME OF PART	SPECIFICATION
1	Body	SUS316 (CF8M, SCS14)
2	Cap	SUS316 (CF8M, SCS14)
3	Ball	SUS316 (CF8M, SCS14)
4	Seat	PTFE (TEFLON)
5	Joint Gasket	PTFE (TEFLON)
6	Thrust Washer	PTFE (TEFLON)
7	Packing	PTFE (TEFLON)
8	Gland Bush	SUS304 (CF8, SCS13)
9	Stem	SUS316 (CF8M, SCS14)
10	Washer	SUS304 (CF8, SCS13)
11	Nut	SUS304 (CF8, SCS13)
12	Lock	SUS304 (CF8, SCS13)
13	Handle	SUS304 (CF8, SCS13)
14	Handle Cover	PVC

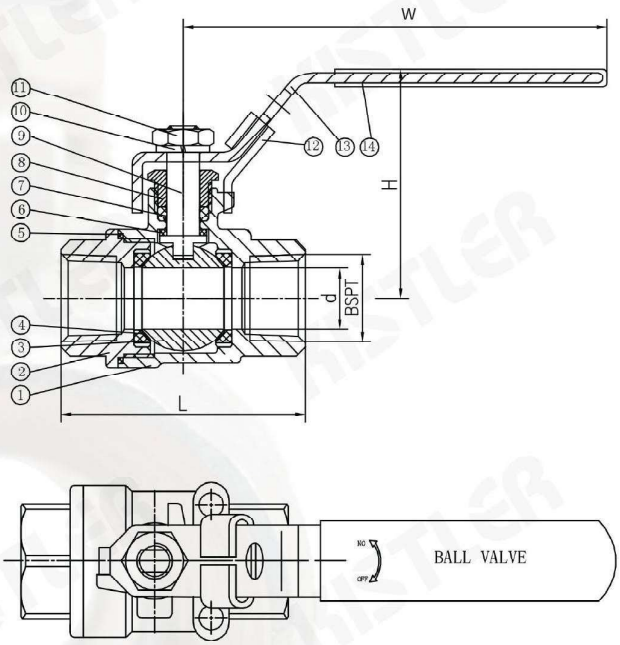

DIMENSIONS

Unit : mm.

SIZE	d	L	H	W
1/4"	8	56	55	103
3/8"	10	56	55	103
1/2"	15	55	58	103
3/4"	20	62	65	111
1"	25	77	57	113
1.1/4"	32	83	84	138
1.1/2"	38	96	89	135
2"	49	108	98	151
2.1/2"	65	150	131	204
3"	80	175	146	246

* Design, Dimensions and Materials are subject to change without notice. Copyright 2018 by APC INTERTRADE CO.,LTD.

BALL VALVE 3-PIECE (Full Bore)

Threaded : BSPT
Materials : SUS316 / Gr. CF8M
Application : Water, Oil, Gas
Features : - Investment Casting Body
- Working Pressure 1/4"- 2" 1000 psi., 2.1/2"- 4" 800 psi.
- Hydrostatic Test Pressure 1/4"- 2" 1500 psi.
2.1/2" 4" 1200 psi.
- Temperature Range -10°C to 100°C
- Adjustable Stem Packing
- Pure Teflon Seals and Seats
- Blow-Out Proof Stem
- Locking Device

Fig. BV-3F



MATERIALS

NO.	NAME OF PART	SPECIFICATION
1	Body	SUS316 (CF8M, SCS14)
2	Cap	SUS316 (CF8M, SCS14)
3	Ball	SUS316 (CF8M, SCS14)
4	Seat	PTFE (TEFLON)
5	Thrust Washer	PTFE (TEFLON)
6	Packing	PTFE (TEFLON)
7	Gland Bush	SUS304 (CF8, SCS13)
8	Stem	SUS316 (CF8M, SCS14)
9	Washer	SUS304 (CF8, SCS13)
10	Nut	SUS304 (CF8, SCS13)
11	Washer	SUS304 (CF8, SCS13)
12	Nut	SUS304 (CF8, SCS13)
13	Bolt	SUS304 (CF8, SCS13)
14	Lock	SUS304 (CF8, SCS13)
15	Handle	SUS304 (CF8, SCS13)
16	Handle Cover	PVC

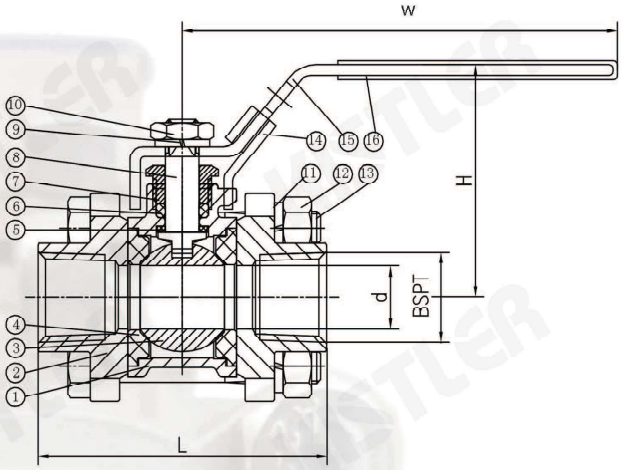

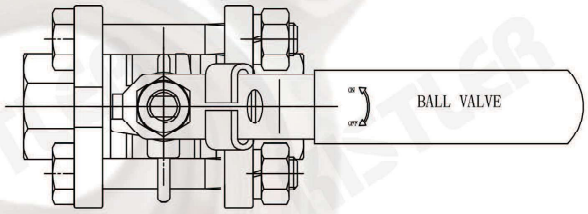

DIMENSIONS

Unit : mm.

SIZE	d	L	H	W
1/4"	8	58	53	96
3/8"	10	58	53	96
1/2"	15	69	54	102
3/4"	20	72	60	112
1"	25	81	75	110
1.1/4"	32	96	80	124
1.1/2"	38	106	95	147
2"	50	127	95	151
2.1/2"	65	170	140	202
3"	80	185	150	210
4"	100	228	168	503

* Design, Dimensions and Materials are subject to change without notice. Copyright 2018 by APC INTERTRADE CO.,LTD.

BALL VALVE 3-PIECE (Full Bore) DIRECT MOUNT TYPE

Threaded : BSPT
Materials : SUS316 / Gr. CF8M
Application : Water, Oil, Gas
Features : - Investment Casting Body
- Working Pressure 1000 psi.
- Temperature Range -10°C to 100°C
- Adjustable Stem Packing
- Blow-Out Proof Stem
- With ISO 5211 Direct Mounting Pad

Fig. BV-3MF



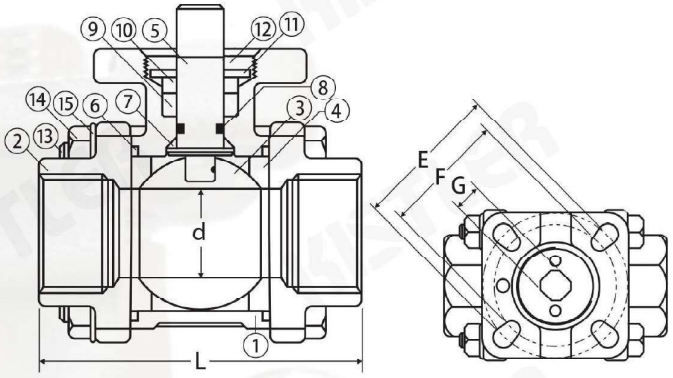

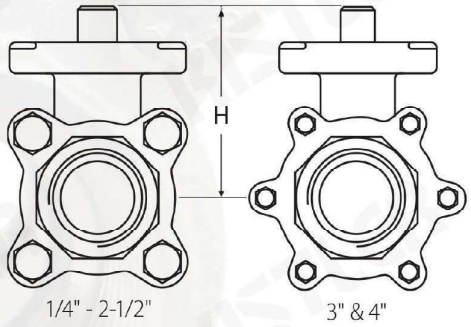

MATERIALS

NO.	NAME OF PART	SPECIFICATION
1	Body	SUS316 (CF8M, SCS14)
2	End Cap	SUS316 (CF8M, SCS14)
3	Ball	SUS316 (CF8M, SCS14)
4	Seal	PTFE (TEFLON)
5	Stem	SUS316 (CF8M, SCS14)
6	Body Seal	PTFE (TEFLON)
7	Gasket	PTFE (TEFLON)
8	O-ring	PTFE (TEFLON)
9	Packing	SUS304 (CF8, SCS13)
10	Packing Ring	SUS304 (CF8, SCS13)
11	Washer	SUS304 (CF8, SCS13)
12	Packing Plate	SUS304 (CF8, SCS13)
13	Body Bolt	SUS304 (CF8, SCS13)
14	Body Nut	SUS304 (CF8, SCS13)
15	Lock Washer	SUS304 (CF8, SCS13)

DIMENSIONS

Unit : mm.

SIZE	d	L	H	G	F	E	Torque Valve N-m
1/4"	10	63	74	9	F03	F04	8
3/8"	12	63	74	9	F03	F04	8
1/2"	15	65	50	9	F03	F04	10
3/4"	20	77	55	9	F03	F04	12
1"	25	89	68	11	F04	F05	18
1.1/4"	32	97	77	11	F04	F05	25
1.1/2"	38	107	92	14	F05	F07	22
2"	50	129	101	14	F05	F07	48
2.1/2"	65	169	125	17	F07	F10	70
3"	80	200	170	17	F07	F10	100
4"	100	228	202	22	F10	F12	130

* Design, Dimensions and Materials are subject to change without notice. Copyright 2010 by APC INTERTRADE CO.,LTD.

GATE VALVE

Threaded : BSPT

Materials : SUS316 / Gr.CF8M

Application : Water, Oil, Gas

Features : - Investment Casting Body
- Working Pressure 200 psi.
  Temperature Range 10°C to 100°C
- Solid Wedge Disc, Integral Seat
- Adjustable Stem Packing
- Non-Rising Stem and Hand Wheel

Fig. GV-200S16



MATERIALS

NO.	NAME OF PART	SPECIFICATION
1	Body	SUS316 (CF8M, SCS14)
2	Disc	SUS316 (CF8M, SCS14)
3	Stem	SUS316 (CF8M, SCS14)
4	Cap	SUS316 (CF8M, SCS14)
5	Joint Gasket	PTFE (TEFLON)
6	Insert	SUS316 (CF8M, SCS14)
7	Stem Packing	PTFE (TEFLON)
8	Gland	SUS316 (CF8M, SCS14)
9	Cap Nut	SUS316 (CF8M, SCS14)
10	Hand Wheel	ALUMINIUM
11	Name Plate	ALUMINIUM
12	Washer	SUS316 (CF8M, SCS14)
13	Nut	SUS316 (CF8M, SCS14)

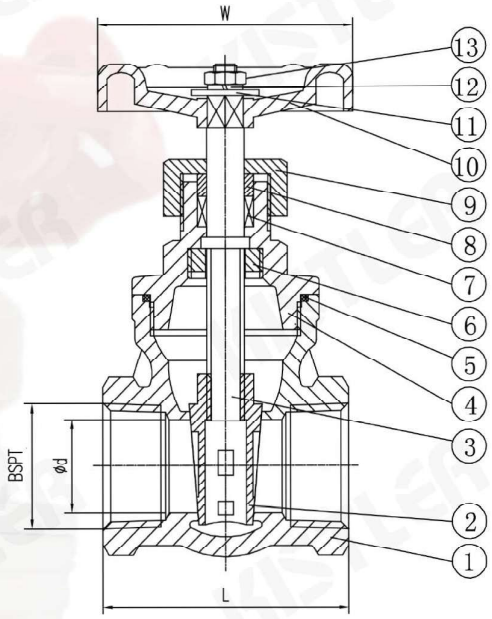

DIMENSIONS

Unit : mm.

SIZE	d	L	H	W
1/4"	10	55	100	70
3/8"	12	60	107	70
1/2"	15	52	92	64
3/4"	20	57	100	64
1"	25	62	110	71
1.1/4"	32	70	120	78
1.1/2"	38	72	135	95
2"	50	85	156	97

* Design, Dimensions and Materials are subject to change without notice. Copyright 2018 by APC INTERTRADE CO.,LTD.

GLOBE VALVE

Threaded : BSPT

Materials : SUS316 / Gr.CF8M

Application : Water, Oil, Gas

Features : - Investment Casting Body
- Working Pressure 200 psi.
- Temperature Range -10°C to 100°C
- Solid Wedge Disc, Integral Seat
- Adjustable Stem Packing
- Rising Stem and Hand Wheel



Fig. GB-200S16

MATERIALS

NO.	NAME OF PART	SPECIFICATION
1	Body	SUS316 (CF8M, SCS14)
2	Disc	SUS316 (CF8M, SCS14)
3	Bonnet	SUS316 (CF8M, SCS14)
4	Gasket	PTFE (TEFLON)
5	Gasket	SUS316 (CF8M, SCS14)
6	Packing	PTFE (TEFLON)
7	Gland	SUS316 (CF8M, SCS14)
8	Cap Nut	SUS316 (CF8M, SCS14)
9	Stem	SUS316 (CF8M, SCS14)
10	Hand Wheel	ALUMINIUM
11	Name Plate	ALUMINIUM
12	Stem Nut	SUS316 (CF8M, SCS14)

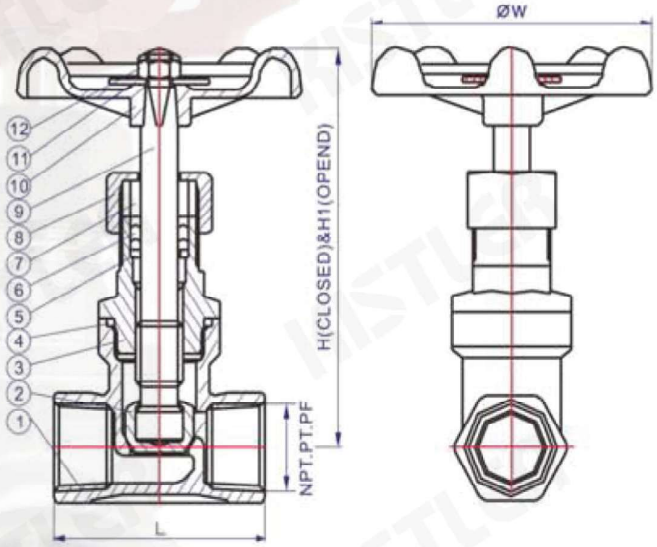

DIMENSIONS

Unit : mm.

SIZE	L	H	H1	W
1/4"	52	95	106	70
3/8"	52	95	106	70
1/2"	66	89	98	64
3/4"	61	90	114	64
1"	86	98	109	72
1.1/4"	99	119	135	95
1.1/2"	114	120	147	95
2"	133	140	155	95

* Design, Dimensions and Materials are subject to change without notice. Copyright 2018 by APC INTERTRADE CO.,LTD.

SWING CHECK VALVE

Threaded : BSPT

Materials : SUS316 / Gr.CF8M

Application : Water, Oil, Gas

Features : - Investment Casting Body
- Working Pressure 200 psi.
- Temperature range -10°C to 100°C
- Solid Wedge Disc

Fig. CV-200S16



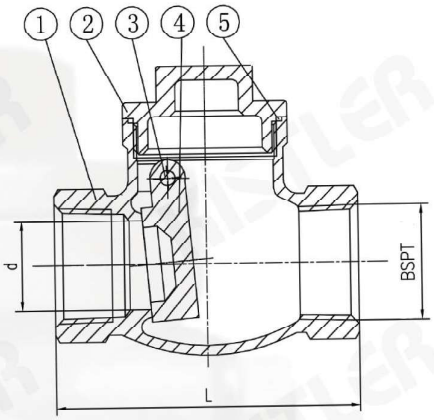

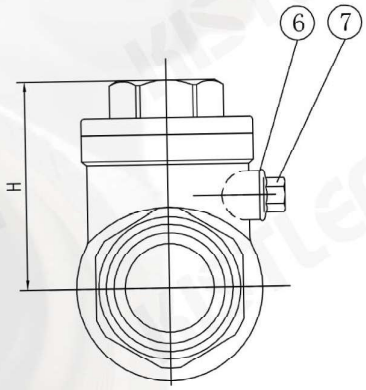

MATERIALS

NO.	NAME OF PART	SPECIFICATION
1	Body	SUS316 (CF8M, SCS14)
2	Cap	SUS316 (CF8M, SCS14)
3	Pin	SUS316 (CF8M, SCS14)
4	Disc	SUS316 (CF8M, SCS14)
5	Joint Gasket	PTFE (TEFLON)
6	Gasket	PTFE (TEFLON)
7	Screw	SUS316 (CF8M, SCS14)

PRESSURE - TEMPERATURE RATINGS

Working Pressure	200 psi
Working Temperature	-10 to 100°C

DIMENSIONS

Unit : mm.

SIZE	d	L	H	D
1/4"	8	65	43	47
3/8"	10	65	43	47
1/2"	15	63	43	41
3/4"	20	75	48	50
1"	25	85	51	52
1.1/4"	32	101	55	70
1.1/2"	40	116	60	71
2"	50	135	76	78
2.1/2"	65	181	99	104
3"	80	200	104	152

* Design, Dimensions and Materials are subject to change without notice. Copyright 2017 by APC INTERTRADE CO.,LTD.

Y-STRAINER

Threaded : BSPT

Materials : SUS316 / Gr.CF8M

Application : Water, Oil, Gas

Features : - Investment Casting Body
- Working Pressure 800psi.
- Temperature Range -10°C to 100°C
- Standad Strainer 80 Mesh

Fig. YST-800S16



MATERIALS

NO.	NAME OF PART	SPECIFICATION
1	Body	SUS316 (CF8M, SCS14)
2	Screen	SUS316 (CF8M, SCS14)
3	Gasket	PTFE (TEFLON)
4	Cap	SUS316 (CF8M, SCS14)

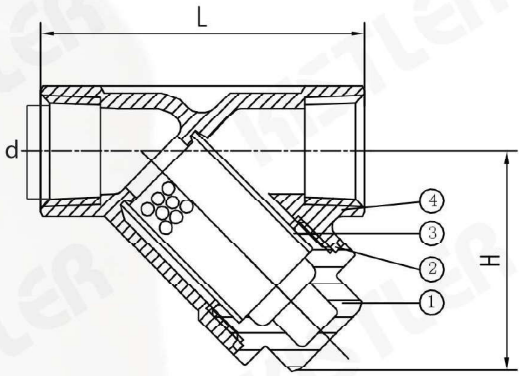

PRESSURE -TEMPERATURE RATINGS

Working Pressure	800 psi
Working Temperature	-10 to 100°C

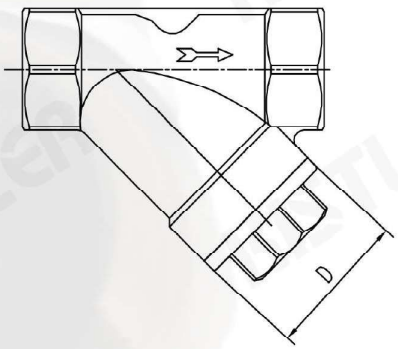

DIMENSIONS

Unit : mm.

SIZE	d	L	H	D
1/4"	10	65	43	47
3/8"	12	65	43	47
1/2"	15	62	43	30
3/4"	20	74	50	35
1"	25	88	61	43
1.1/4"	32	100	68	47
1.1/2"	40	108	73	54
2"	50	138	92	65
2.1/2"	65	165	118	83
3"	80	200	104	152

* Design, Dimensions and Materials are subject to change without notice. Copyright 2018 by APC INTERTRADE CO.,LTD.

SPRING CHECK VALVE

Threaded : BSPT

Materials : SUS316 / Gr.CF8M

Application : Water, Oil, Gas

Features : - Investment Casting Body

- Working Pressure 800 psi.

- Temperature Range -10°C to 100°C

Fig. CV-800S16



MATERIALS

NO.	NAME OF PART	SPECIFICATION
1	Body	SUS316 (CF8M, SCS14)
2	Spring	SUS316 (CF8M, SCS14)
3	Disc	SUS316 (CF8M, SCS14)
4	Seal	SUS316 (CF8M, SCS14)
5	Gasket	PTFE (TEFLON)

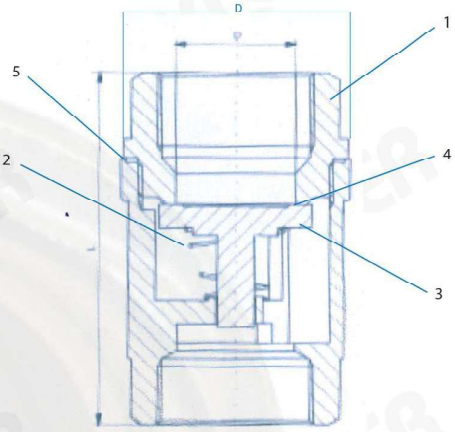

PRESSURE - TEMPERATURE RATINGS

Working Pressure	800 psi
Working Temperature	-10 to 100°C

DIMENSIONS

Unit : mm.

SIZE	G	L	D
1/2"	15	57	34
3/4"	20	66	41
1"	25	78	46
1.1/4"	32	86	57
1.1/2"	40	102	67
2"	50	119	80

* Design, Dimensions and Materials are subject to change without notice. Copyright 2018 by APC INTERTRADE CO.,LTD.

NEEDLE VALVE

Fig. KL-ND1



FEATURES

1. Threaded Ends Confons to BSPT, NPT
2. Investment Casting ASTM-A351, CF8M
3. The Needle Valves are ideal for effectively controlly high pressure oil and steam
4. Packing nut can be tightened to adjust atem packing
5. Max. Working pressure 6000 psi
6. Max. Temperature 200ºC

MATERIALS

NAME OF PARTS	SPECIFCATION
Body, Cap, Stem	SUS316 (CF8M, SCS14)
Packing Gasket, Packing Glang	SUS316 (CF8M, SCS14)
Gasket	Bronze
Packing	PTFE
Hand Wheel	HT200
Nut	A194 8M

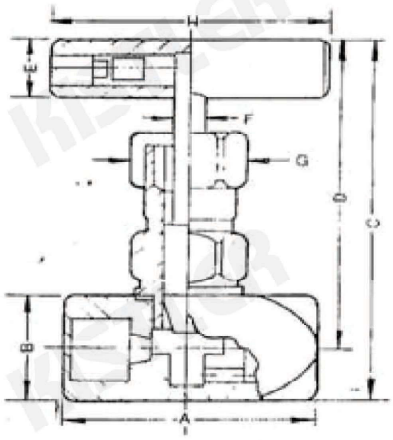

DIMENSIONS

SIZE	1/4”	3/8”	1/2”	3/4”	1”
A	50.0	50.0	54.0	60.0	71.3
B	26.0	26.0	26.0	32.0	42.2
C	92.0	93.6	94.0	96.0	122.4
D	78.5	80.6	81.0	80.0	101.3
E	14.0	14.0	14.0	14.0	18.3
H	59.0	60.3	60.3	60.3	71.2

* Design, Dimension and materials are subject to change without notice. Copyright 2015 by APC INTERTRADE CO.,LTD.

APPLICATION

Foot valve is basically a check valve fitted to the end of a suction pipe leading to a pump. Its purpose to keep fluid tapped in the suction pipe when the pump stops, thus maintaining a suitable prime for the pump. When the pump restarts, the suction created opens the valve. giving full flow to the pump inlet.

TECHNICAL FEATURES :

1. Operates in any position from horizontal to vertical ascending or oblique pipelines to allow flow in one direction.
2. Minimum head loss.
3. Silent and reliable sealing.
4. Simple and robust design suitable for general applications.
5. Does not generate hammering.
6. The return spring ensures that the Foot Valve work in any position.
7. Closing system, long back axial guiding for reduces displacement.

Fig. FVSS (Screwed End.)



PERFORMANCE

Working Pressure	10 bar
Testing Pressure	16 bar
Service Temperature	VITON 200°C
	SUS316 300°C

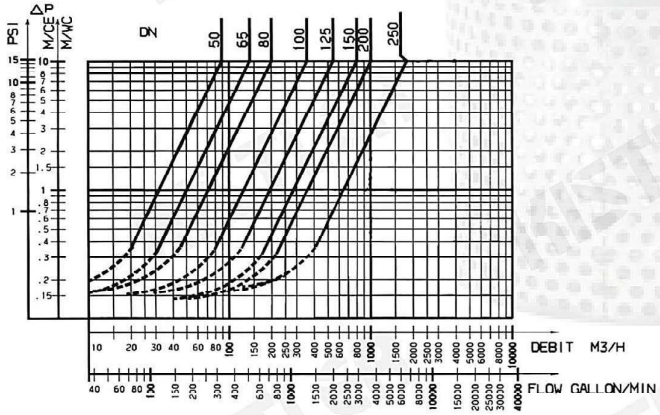

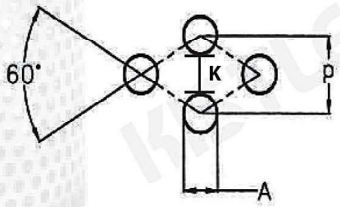

DIMENSIONS

Unit : mm.

SIZE	DN	Height	Outside Dia	A	P	K	Approx. W/kg.
1"	25	135	68	3	5	2	1
1.1/2"	40	162	76	3	5	2	1.2
2"	50	190	90	3	5	2	1.8
2.1/2"	65	230	115	3	5	2	3
3"	80	250	140	6.5	9.5	3	5
4"	100	310	165	6.5	9.5	3	7

MATERIALS

NAME OF PART	SPECIFICATION
Body & Disc	Stainless Steel 316 (CF8M, SCS14)
Stem	Stainless Steel 316 (CF8M, SCS14)
Seat	VITON / Stainless Steel 316
Spring	Stainless Steel 316 (CF8M, SCS14)
Strainer	Stainless Steel 316 (CF8M, SCS14)

* Design, Dimensions and Materials are subject to change without notice. Copyright 2018 by APC INTERTRADE CO.,LTD.

APPLICATION

Foot valve is basically a check valve fitted to the end of a suction pipe leading to a pump. Its purpose to keep fluid tapped in the suction pipe when the pump stops, thus maintaining a suitable prime for the pump. When the pump restarts, the suction created opens the valve. giving full flow to the pump inlet.

TECHNICAL FEATURES :

1. Operates in any position from horizontal to vertical ascending or oblique pipelines to allow flow in one direction.
2. Minimum head loss.
3. Silent and reliable sealing.
4. Simple and robust design suitable for general applications.
5. Does not generate hammering.
6. The return spring ensures that the Foot Valve work in any position.
7. Closing system, long back axial guiding for reduces displacement.
8. Screen : hole dimeter 6.5 mm

Fig. FVS-901 (ANSI150)
FVS-902 (JIS10K)
FVS-903 (PN10)
FVS-904 (PN16)



PERFORMANCE

Working Pressure	10 bar
Testing Pressure	16 bar
Service Temperature	NR 80°C
	VITON 200°C
	SUS316 300°C

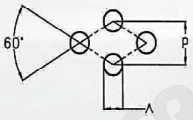

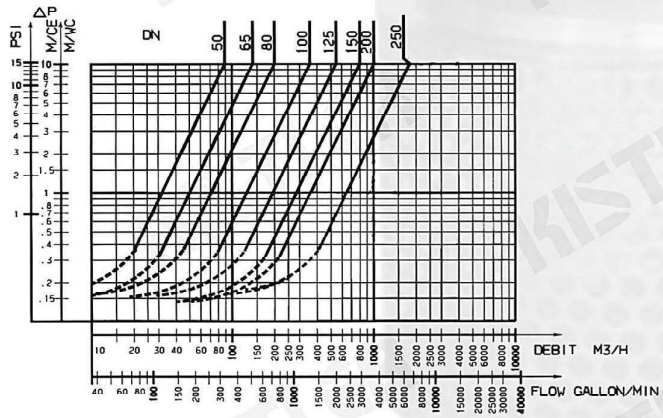

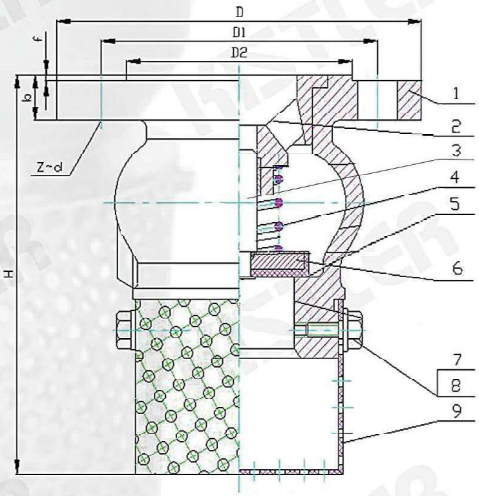

DIMENSIONS

Unit : mm.

SIZE	DN	Height	Approx. W/kg.
2"	50	180	4
2.1/2"	65	225	6
3"	80	260	7
4"	100	300	10
5"	125	355	16
6"	150	360	18
8"	200	450	25
10"	250	550	40

MATERIALS

NO.	NAME OF PART	SPECIFICATION
1	Body	Stainless Steel 316 (CF8M)
2	Bonnet	Stainless Steel 316 (CF8M)
3	Guiding Stem	Stainless Steel 316 (CF8M)
4	Spring	Stainless Steel 316 (CF8M)
5	Seat	VITON / Stainless Steel 316 (CF8M)
6	Disc	Stainless Steel 316 (CF8M)
7	Nut	Stainless Steel 316 (CF8M)
8	Washer	Stainless Steel 316 (CF8M)
9	Strainer	Stainless Steel 316 (CF8M)

* Design, Dimensions and Materials are subject to change without notice. Copyright 2018 by APC INTERTRADE CO.,LTD.

PN 40 Disco Check Valve **Fig. DICV**



1/2" - 4"

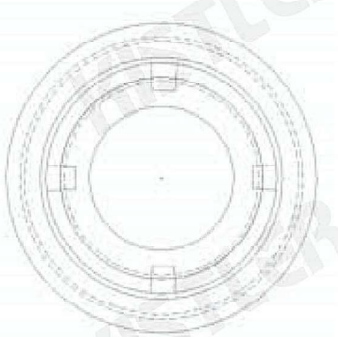

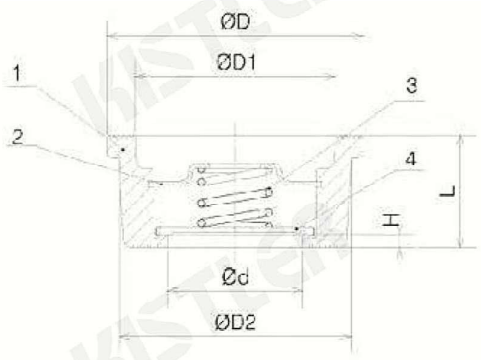



5" - 8"

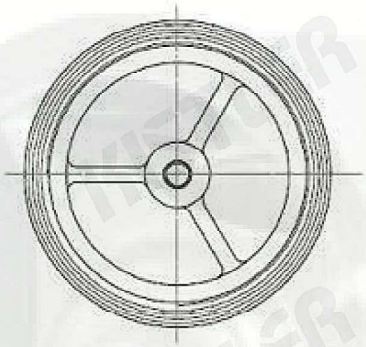

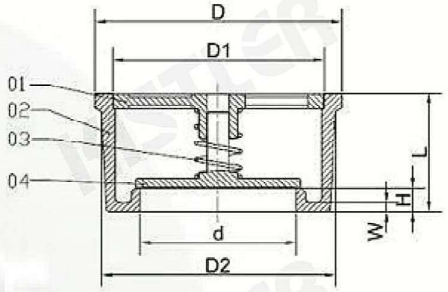

FEATURES & APPLICATIONS

- Water type Connection
- Investment casting body and caps
- The valve are designed to prevent reverse flow automatically

Note :

- Can be intalled horizontally or vertically facing upwords
- Can be adapted for different connection type : PN, ANSI, JIS
- For General and Industrial Services
- Applicable Medium : Water, Oil & Gas, Seawage Water Plants, Steam Raising Units and Steam Supply Pipelines & Power Supply

MATERIALS

NO.	NAME OF PARTS	MATERIAL
1	Body	SUS316 (CF8M, A351)
2	Disc	SUS316 (CF8M, SCS14)
3	Spring Retainer	SUS316 (CF8M, SCS14)
4	Spring	SUS316 (CF8M, A351)

PERFORMANCE

MAX.WORKING PRESSURE	40 bar
MAX.WORKING TEMPERATURE	-10°C + 250°C

DIMENSIONS

Unit : mm

SIZE inch	1/2"	3/4"	1"	1.1/4"	1.1/2"	2"	2.1/2"	3"	4"	5"	6"	8"
(DN),d mm.	15	20	25	32	40	50	65	80	100	125	150	200
d	15	20	25	32	40	49	62	75	85	118	140	185
D	39	46	54	70	83	96	115	131	153	187	217	267
D1	28.5	36.2	43.3	56	68.5	80.5	99	117	135	160	187	240
D2	32	40	46	60	72	84	103	123	140	177	205	261
L	16	19	21	27	31	40	46	50	60	90	106	140
H	3	3	3	3.5	3.5	4	5	5	6	6.8	7.2	8
Wt(Kg)	0.09	0.12	0.16	0.31	0.43	0.78	1.03	1.54	2.25	5.50	8.30	16.10

* Design, Dimension and materials are subject to change without notice. Copyright 2015 by APC INTERTRADE CO.,LTD.

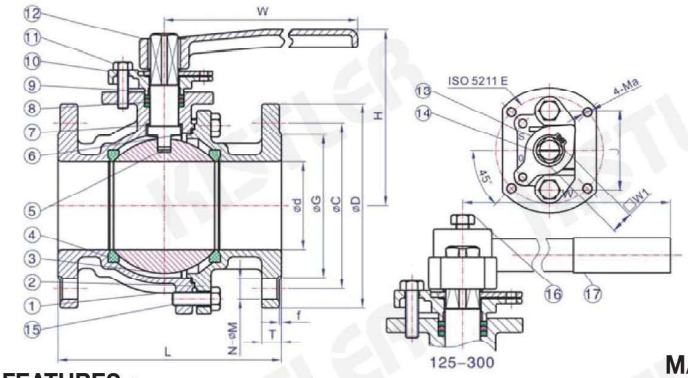

Fig. BV-2FJS04
BV-2FJS16



FEATURES :

- Face to Face dimensions : JIS B2002
- End Flange dimensions : JIS B2239
- Design ANSI 16, 34
- Test : JIS B2203
- Blow-Out proof stem / full port
- Investment casting body
- Lever operated or gear operated
- With ISO 5211 Mounting pad

TEST PRESSURE :

SHELL (BY WATER)		2.1 MPa 21.5kg/cm²
SEAT	BY WATER	1.6 MPa 16.5kg/cm²
	BY AIR	0.6 MPa 6kg/cm²

MAX TEMPERATURE

PTFE	100°C
TFM 4215	220°C
SUS316+GRAPHITE	350°C

MATERIALS

NO.	NAME OF PARTS	MATERIAL
1	Body	Stainlees Steel 304, 316
2	Cap	Stainlees Steel 304, 316
3	Ball	Stainlees Steel 304, 316
4	Seat	PTFE
5	Stem	Stainlees Steel 304, 316
6	Gasket	PTFE
7	Thrust Washer	PTFE
8	Packing	PTFE
9	Stem Packing	PTFE
10	Gland	Stainlees Steel 304, 316
11	Gland Bolt	Stainlees Steel 304, 316
12	Handle	WCB
13	Stopper	Stainlees Steel 304, 316
14	Snap Ring	Stainlees Steel 304, 316
15	Bolt	Stainlees Steel 304, 316
16	Handle Bolt	Stainlees Steel 304, 316
17	Plastic Cover	Plastic

DIMENSIONS

Unit : mm.

SIZE	d	D	C	G	T		N-ØM	L	H	W	W1	J	ISO 5211	E	Ma
					FC	SUS									
1/2"	15	95	70	51	16	12	4-Ø15	110	70	160	12	50	F04	42	M5
3/4"	20	100	75	56	18	14	4-Ø15	120	73	160	12	50	F04	42	M5
1"	25	125	90	67	18	14	4-Ø19	130	77	160	12	50	F04	42	M5
1.1/4"	32	135	100	76	20	16	4-Ø19	140	85	160	12	50	F05	50	M6
1.1/2"	40	140	105	81	20	16	4-Ø19	165	104	186	17	62	F07	70	M8
2"	50	155	120	96	20	16	4-Ø19	180	114	186	17	62	F07	70	M8
2.1/2"	65	175	140	116	22	18	4-Ø19	190	142	324	21	75	F07	70	M8
3"	80	185	150	126	22	18	4-Ø19	200	153	324	21	75	F10	102	M10
4"	100	210	175	151	24	18	4-Ø19	230	166	324	21	75	F10	102	M10
5"	125	250	210	182	24	20	4-Ø23	300	224	750	24	89	F12	125	M12
6"	150	280	240	212	26	22	4-Ø23	340	247	750	24	89	F12	125	M12
8"	200	330	290	262	26	22	4-Ø23	450	305	1000	32	100	F12	125	M12
10"	250	400	355	324	30	24	4-Ø25	530	327	1000	32	100	F14	140	M16
12"	300	445	400	368	32	24	4-Ø25	610	355	1000	32	100	F14	140	M16

* Design, Dimensions and Materials are subject to change without notice. Copyright 2018 by APC INTERTRADE CO.,LTD.

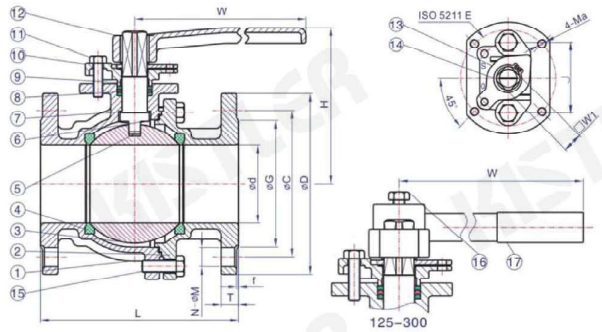

Fig. BV-2FAS04
BV-2FAS16



FEATURES :

- Face to Face Dimension : ANSI B16, 10
- End Flange Dimension : ANSI B16, 5
- Design ANSI 16, 34
- Test : API 598
- Blow-Out proof stem / full port
- Investment casting body
- Lever operated or gear operated
- With ISO 5211 Mounting pad

TEST PRESSURE :

SHELL (BY WATER)		450 PSI 32kg/cm^2
SEAT	BY WATER	315 PSI 22kg/cm
	BY AIR	80 PSI 6kg/cm^2

MAX TEMPERATURE

PTFE	100°C
TFM 4215	220°C
SUS316+GRAPHITE	350°C

MATERIALS

NO.	NAME OF PARTS	MATERIAL
1	Body	Stainlees Steel 304, 316
2	Cap	Stainlees Steel 304, 316
3	Ball	Stainlees Steel 304, 316
4	Seat	PTFE / TFM4215 / SUS316+Graphite
5	Stem	Stainlees Steel 304, 316
6	Gasket	PTFE / TFM4215 / SUS316+Graphite
7	Thrust Washer	PTFE / TFM4215 / SUS316+Graphite
8	Packing	PTFE / TFM4215 / SUS316+Graphite
9	Stem Packing	PTFE / TFM4215 / SUS316+Graphite
10	Gland	Stainlees Steel 304, 316
11	Gland Bolt	Stainlees Steel 304, 316
12	Handle	WCB
13	Stopper	Stainlees Steel 304, 316
14	Snap Ring	Stainlees Steel 304, 316
15	Bolt	Stainlees Steel 304, 316
16	Handle Bolt	Stainlees Steel 304, 316
17	Plastic Cover	Plastic

DIMENSIONS

Unit : mm.

SIZE	d	D	C	G	T		N-ØM	L	H	W	W1	J	ISO 5211	E	Ma
					FC	SUS									
1/2"	15	89	60.5	35	12.1	12.1	4-Ø16	108	70	160	12	50	F04	42	M5
3/4"	20	98	70	43	12.7	12.1	4-Ø16	117	73	160	12	50	F04	42	M5
1"	25	108	79.5	51	14.3	12.1	4-Ø16	127	77	160	12	50	F04	42	M5
1.1/4"	32	117	89.5	64	14.9	12.7	4-Ø16	140	85	160	12	50	F05	50	M6
1.1/2"	40	127	98.5	73	17.5	14.3	4-Ø16	165	104	186	17	62	F07	70	M8
2"	50	152	120.5	92	19.1	15.9	4-Ø19	178	114	186	17	62	F07	70	M8
2.1/2"	65	178	139.5	105	22.3	17.5	4-Ø19	190	142	324	21	75	F07	70	M8
3"	80	190	152.5	127	23.9	19.1	4-Ø19	203	153	324	21	75	F10	102	M10
4"	100	229	190.5	157	23.9	23.9	4-Ø19	229	166	324	21	75	F10	102	M10
5"	125	254	216	186	23.9	23.9	4-Ø22	356	224	750	24	89	F12	125	M12
6"	150	279	241.5	216	25.4	25.4	4-Ø22	394	247	750	24	89	F12	125	M12
8"	200	343	298.5	270	28.6	28.6	4-Ø22	457	305	1000	32	100	F12	125	M12
10"	250	406	362	324	30.2	30.2	4-O25	553	327	1000	32	100	F14	140	M16
12"	300	483	432	381	31.8	31.8	4-O25	610	355	1000	32	100	F14	140	M16

* Design, Dimensions and Materials are subject to change without notice. Copyright 2017 by APC INTERTRADE CO.,LTD.

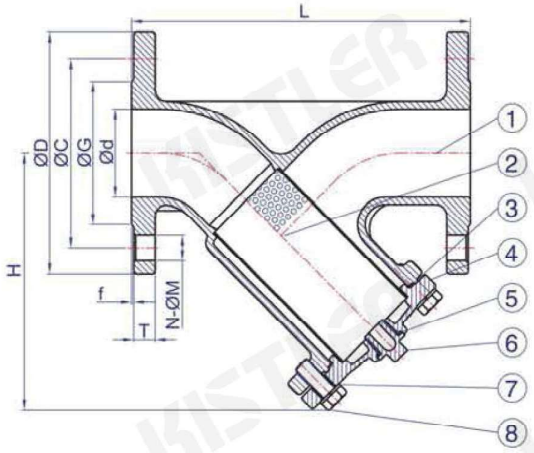

Fig. YS - 701S (ANSI150)
YS - 702S (JIS10K)



FEATURE :

- End Flange Dimension : JIS B2239 / ANSI B16.5
- Desig : ANSI B16.34
- Test : JIS B2203 / API 598
- Investment Casting Body

MATERIALS

NO.	NAME OF PARTS	SPECIFICATION
1	Body	CF8 , CF8M
2	Screen	CF8
3	Gasket	PTFE
4	Bonnet	CF8 , CF8M
5	Gasket	PTFE
6	Stopper	CF8M
7	Spring Washers	CF8
8	Bonnet Bolt	CF8

TEST PRESSURE

		ANSI-150LB	JIS-10K
SHELL	BY WATER	450PSI	2.1MPa
		32kg/cm^2	21.5kg/cm^2
	BY AIR	85PSI	0.6MPa
		6kg/cm^2	6kg/cm^2

SCREEN SPECIFICATION

SIZE	PREFORATION
1/2" - 1.1/4"	1.5MM
1.1/2" - 12"	2MM

DIMENSIONS

Unit : mm.

SIZE inch.		d	L	H	D		C		G		f		T		N-ØM	
					JIS10K	ANSI150	JIS10K	ANSI150	JIS10K	ANSI150	JIS10K	ANSI150	JIS10K	ANSI150	JIS10K	ANSI150
1/2"	15	15	120	85	95	89	70	60.5	51	35	1	1.6	12	12.1	4-Ø15	4-Ø16
3/4"	20	20	140	87	100	98	75	70	56	43	1	1.6	14	12.1	4-Ø15	4-Ø16
1"	25	25	150	114	125	108	90	79.5	67	51	1	1.6	14	12.1	4-Ø19	4-Ø16
1.1/2"	40	40	190	135	140	127	105	98.5	81	73	2	1.6	16	14.3	4-Ø19	4-Ø16
2"	50	50	210	155	155	152	120	120.5	96	92	2	1.6	16	15.9	4-Ø19	4-Ø19
2.1/2"	65	65	250	189	175	178	140	139.5	116	105	2	1.6	18	17.5	4-Ø19	4-Ø19
3"	80	80	280	200	185	190	150	152.5	126	127	2	1.6	18	19.1	8-Ø19	4-Ø19
4"	100	100	340	232	210	229	175	190.5	151	157	2	1.6	18	23.9	8-Ø19	8-Ø19
5"	125	125	380	274	250	254	210	216	182	186	2	1.6	20	23.9	8-Ø23	8-Ø22
6"	150	150	420	326	280	279	240	241.5	212	216	2	1.6	22	25.4	8-Ø23	8-Ø22
8"	200	200	500	397	330	343	290	298.5	262	270	2	1.6	22	28.6	12-Ø23	8-Ø22
10"	250	250	730	512	400	406	355	352	324	324	2	1.6	24	30.2	12-Ø25	12-Ø25
12"	300	300	850	562	445	483	400	432	368	381	3	1.6	24	31.8	16-Ø25	12-Ø25

* Design, Dimensions and Materials are subject to change without notice. Copyright 2017 by APG INTERTRADE CO.,LTD.

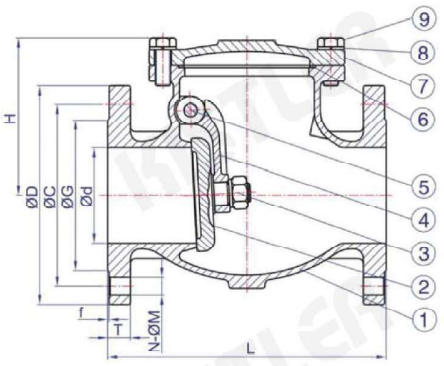

Fig. SCV-601S (ANSI150)
SCV-602S (JIS10K)

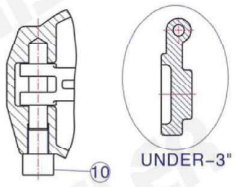



FEATURE AND APPLICATION

- Face to Face Dimension : JIS B2002 / ANSI B16.10
- End Flange Dimension : JIS B2239 / ANSI B16.5
- Design : ANSI 16.34
- Test : JIS B2203 / API 598

Investment Casting Body

PERFORMANCE

		ANSI 150LB	JIS 10K
SHELL BY WATER		450 PSI 32 kg/cm²	2.1 MPa 21.5 kg/cm²
SEAT	BY WATER	315 PSI 22 kg/cm²	1.6 MPa 16.5 kg/cm²
	BY AIR	85 PSI 6 kg/cm²	0.6 MPa 6 kg/cm²

MAX TEMPERATURE

PTFE	100°C
GRAPHITE	350°C

MATERIALS

NO.	NAME OF PARTS	SPECIFICATION
1	Body	SUS304, SUS316
2	Disc	SUS304, SUS316
3	Nut	SUS304
4	Arm Hinge	SUS304, SUS316
5	Hinge Pin	SUS304, SUS316
6	Gasket	*PTFE, SUS304+GRAPHITE
7	Bonnet	SUS304, SUS316
8	Spring Washers	SUS304
9	Bonnet Bolt	SUS304
10	Bolt	SUS304

* 8" Up Gasket : 304+Graphite

DIMENSIONS

Unit : mm.

SIZE inch.	d	L	H	D		C		G		f		T		N-ØM	
				10K	A150	10K	A150	10K	A150	10K	A150	10K	A150	10K	A150
1/2"	15	108	51	95	89	70	60.5	51	35	1	1.6	12	12.1	4-Ø15	4-Ø16
3/4"	20	117	54	100	98	75	70.5	56	43	1	1.6	14	12.1	4-Ø15	4-Ø16
1"	25	127	64	125	108	90	79.5	67	51	1	1.6	14	12.1	4-Ø19	4-Ø16
1.1/4"	32	140	68	135	117	100	89.5	76	64	2	1.6	16	12.7	4-Ø19	4-Ø16
1.1/2"	40	165	75	140	127	105	98.5	81	73	2	1.6	16	14.3	4-Ø19	4-Ø16
2"	50	203	97	155	152	120	120.5	96	92	2	1.6	16	15.9	4-Ø19	4-Ø19
2.1/2"	65	216	111	175	178	140	139.5	116	105	2	1.6	18	17.5	4-Ø19	4-Ø19
3"	80	241	120	185	190	150	152.5	126	127	2	1.6	18	19.1	8-Ø19	4-Ø19
4"	100	292	162	210	229	175	190.5	151	157	2	1.6	18	23.9	8-Ø19	8-Ø19
5"	125	330	179	250	254	210	216	182	186	2	1.6	20	23.9	8-Ø23	8-Ø22
6"	150	356	203	280	279	240	241.5	212	216	2	1.6	22	25.4	8-Ø23	8-Ø22
8"	200	495	236	330	343	290	298.5	262	270	2	1.6	22	28.6	12-Ø23	8-Ø22
10"	250	622	302	400	406	355	352	3214	324	2	1.6	24	30.2	12-Ø25	12-Ø25
12"	300	698	340	445	483	400	432	368	381	3	1.6	24	31.8	16-Ø25	12-Ø25
14"	337	787	385	490	533	445	476.5	413	413	3	1.6	26	35.0	16-Ø25	12-Ø29

* Design, Dimensions and Materials are subject to change without notice. Copyright 2017 by APC INTERTRADE CO.,LTD.

KISTLER®

DIRECT PRESSURE REDUCING VALVE

INDUSTRIAL VALVES | Brass Valve

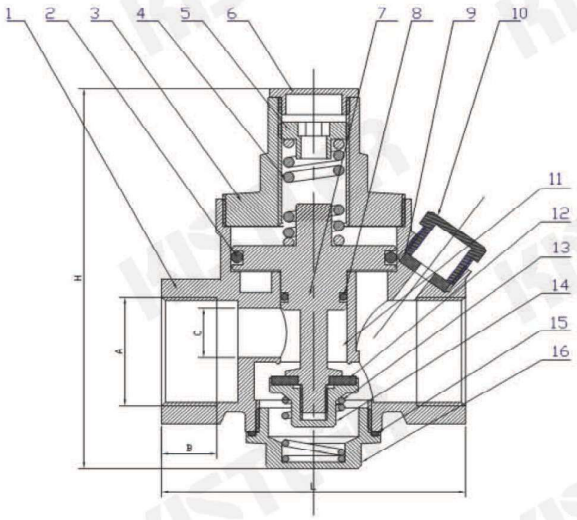

FIG.KL-DPRV-200



FEATURES :

Direct type pressure reducing valve suitable for domestic water systems, compressed air systems,and corrosive medium system, etc. It can be installed in any position: vertical, horizontal, oblique , pressure reducing valve can be adjusted easily, and ensure a stable pressure for the system.

Applicable Media : Water, Air , Oil
Operating Temperature :<80°C
Thread : BSPT
Working Pressure : 0.1 - 16 Bar

MATERIALS

NO.	NAME OF PARTS	MATERIAL
1	Body	Brass
2	O-ring	NBR
3	Cap	Brass
4	Springs	Steel
5	Adjustment Cap	Brass
6	Bonnet	Brass
7	Stem	Brass
8	O-ring	NBR
9	Seat Ring	NBR
10	Bonnet	Brass
11	Filter	SUS304
12	Seat Ring	NBR
13	Spring	SUS304
14	Disc	Brass
15	O-ring	NBR
16	Bonet	Brass

DIMENSIONS

Unit:mm

Size	L	H	A	B	C
1/2"	72	91	G 1/2"	13	10
3/4"	75	93	G 3/4"	13	10
1"	79.8	106	G 1"	13	15
1.1/4"	84	110	G 1.1/4"	14	15
1.1/2"	102	140	G 1.1/2"	16.5	20
2"	111	152	G 2"	20	22

* Design, Dimension and materials are subject to change without notice. Copyright 2015 by APC INTERTRADE CO.,LTD.

KISTLER®

MODULATING FLOAT VALVE

INDUSTRIAL VALVES | Ductile Iron Valve

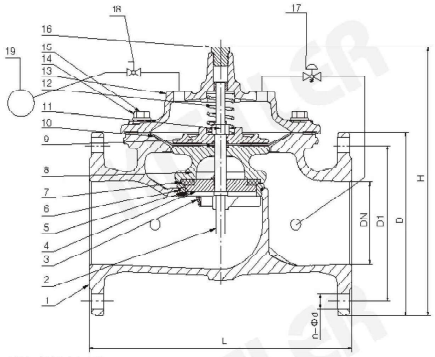

FIG. KL-FL-101 (ANSI150)

FIG. KL-FL-102 (JIS10K)

FIG. KL-FL-103 (PN10)

FIG. KL-FL-104 (PN16)

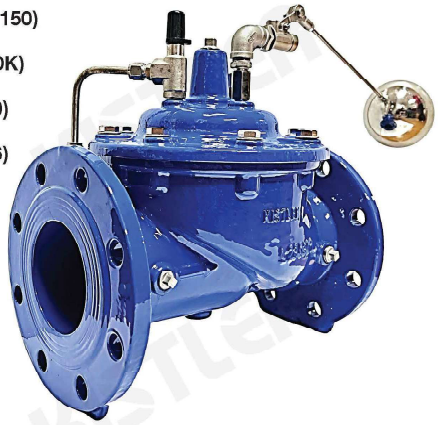

FEATURES :-

1. The diaphragm assembly provides long life and reliability with a stem guided by both top and seat rings.
2. All ductile iron parts are coated with split epoxy resin to resist corrosion.
3. During maintenance, the main valve does not need to be removed from the pipeline and can be repaired directly on line.
4. The alignment of valve body allows for better control characteristics and lower head loss.
5. Ductile iron body has high strength and light weight.
6. Reinforced nylon diaphragm, film thickness uniform high strength, good precision, durable.
7. Internal use of stainless steel seat, guide platen and shaft, durable.
8. Good closing effect, zero leakage safety.
9. Hydraulic operation does not need external power, can cooperate with the need to match different guide valves and accessories as opening and closing or adjust the water level, pressure and flow.

TECHNICAL SPECIFICATION :-

- Design and manufacturing shall comply with JB/T10674
- Valve inspection and test shall comply with the provisions of GB/T13927-2008, API598
- The length of valve structure shall comply with JB/T10674
- Flange connection standard : GB/T1724.6, GB/T19113-2010 EN1092-2, ANSI B16.10
- The surface of the valve shall be coated with expoxy resin powder before assembly and comply with provision of GB/T17219
- Flange connection standard : GB/T1724.6, GB/T19113-2010, EN1092-2, ANSI B16.10

Nominal pressure : PN10/PN16/PN25/PN40, 125LB/150LB

Applicable media : Water, Oil, Gas, Etc.

MATERIALS

NO.	NAME OF PARTS	SPECIFICATION
1	Body	Ductile Iron
2	Stem	SUS410
3	Seat	CF8 (SUS304)
4	Scaling Ring Pressure Plate	Q235 (Carbon Steel)
5	O-Ring	NBR
6	O-Ring	NBR
7	Seal Ring	EPDM
8	Valve Disc	Ductile Iron
9	Diaphragm Pressure Sleeve	Ductile Iron
10	Hexagon Nut	SUS304
11	Spring	SUS304
12	Diaphragm	EPDM
13	Bonnet	Ductile Iron
14	Hexagon Nut	SUS304
15	Stud Bolt	SUS304
16	Plug Screw	SUS304
17	Needle Valve	SUS304
18	Ball Valve	SUS304
19	Float Valve	SUS304

MAXIMUM PRESSURE CONDITIONS :-

Size	Max Working Pressure	Min/Max Temp	Test Pressure	
			Shell	Seat
1.1/2" - 12"	232 Psi(16 Bar)	-10°C to 80°C	24 Bar	17.6 Bar

DIMENSIONS

Unit : mm.

SIZE	L	H	JIS10K			ANSI150			PN10			PN16		
			D	D1	N	D	D1	N	D	D1	N	D	D1	N
2"	230	240	155	120	4	152	121	4	165	125	4	165	125	4
2.1/2"	290	285	175	140	4	178	140	4	185	145	4	185	145	4
3"	310	310	185	150	8	191	152	4	200	160	8	200	160	8
4"	350	345	210	175	8	229	191	8	220	180	8	220	180	8
5"	400	350	250	210	8	254	216	8	250	210	8	250	210	8
6"	480	480	280	240	8	279	241	8	285	240	8	285	240	8
8"	600	600	330	290	12	343	299	8	340	295	8	340	295	12
10"	730	700	400	355	12	406	362	12	395	350	12	405	355	12
12"	850	780	445	400	16	483	432	12	445	400	12	460	410	12

* Design, Dimensions and Materials are subject to change without notice. Copyright 2017 by APC INTERTRADE CO.,LTD.

KISTLER

PRESSURE REDUCING VALVE

INDUSTRIAL VALVES | Ductile Iron Valve

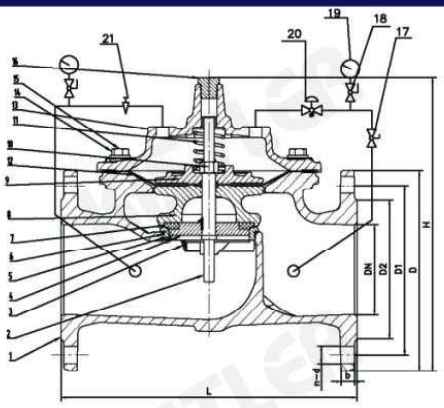

FIG. KL-PRV-201 (ANSI150)

FIG. KL-PRV-202 (JIS10K)

FIG. KL-PRV-203 (PN10)

FIG. KL-PRV-204 (PN16)



FEATURES AND BENEFITS :-

- Automatic control valve, running by itself.
- One complete combined disc, easy for maintenance.
- Diaphragm type, quick response against pressure change.
- Big inner chamber, avoid noise by cavitations and reduce static pressure.
- All ductile iron parts are coated with split epoxy resin to resist corrosion
- Inlet pressure balancing function, fluctuating inlet pressure doesn't influence outlet pressure.
- Stainless steel and bronze parts, corrosion resistant, reinforced Nylon + EPDM diaphragm has long life cycle.

TECHNICAL SPECIFICATION :-

- Design and manufacturing shall comply with JB/T10674
- Valve inspection and test shall comply with the provisions of GB/T13927-2008, API598
- The length of valve structure shall comply with JB/T10674
- Flange connection standard : GB/T1724.6, GB/T19113-2010 EN1092-2, ANSI B16.10
- The surface of the valve shall be coated with expoxy resin powder before assembly and comply with provision of GB/T17219
- Flange connection standard : GB/T1724.6, GB/T19113-2010, EN1092-2, ANSI B16.10
- The surface of the valve shall be coated with expoxy resin powder before assembly and comply with provision of GB/T17219
- Flange connection standard : GB/T1724.6, GB/T19113-2010, EN1092-2, ANSI B16.10

Nominal pressure : PN10/PN16/PN25/PN40, 125LB/150LB

Applicable media : Water, Oil, Gas, Etc.

MATERIALS

NO.	NAME OF PARTS	SPECIFICATION
1	Body	Ductile Iron
2	Stem	SUS410 / SUS304 / SUS316
3	Seat	CF8 (SUS304)
4	Sealing Ring Pressure Plate	Q235 (Carbon Steel)
5	O-Ring	NBR
6	O-Ring	NBR
7	Seal Ring	EPDM
8	Valve Disc	Ductile Iron
9	Diaphragm Pressure Sleeve	Ductile Iron
10	Hexagon Nut	SUS304
11	Spring	SUS304
12	Diaphragm	EPDM
13	Bonnet	Ductile Iron
14	Gasket	Carbon Steel /SUS304 /SUS316
15	Hexagon Nut	SUS304
16	Plug Screw	SUS304
17	Ball Valve	SUS304
18	Ball Valve	SUS304
19	Pressure Guage	Assembly
20	Pilot	SS304
21	Needle Valve	SS304

MAXIMUM PRESSURE CONDITIONS :-

Size	Max Working Pressure	Min/Max Temp	Test Pressure	
			Shell	Seat
1.1/2" - 12"	232 Psi(16 Bar)	-10℃ to 80℃	24 Bar	17.6 Bar

DIMENSIONS

Unit : mm.

SIZE	L	H	JIS10K			ANSI150			PN10			PN16		
			D	D1	N	D	D1	N	D	D1	N	D	D1	N
2"	230	305	155	120	4	152	121	4	165	125	4	165	125	4
2.1/2"	290	320	175	140	4	178	140	4	185	145	4	185	145	4
3"	310	335	185	150	8	191	152	4	200	160	8	200	160	8
4"	350	355	210	175	8	229	191	8	220	180	8	220	180	8
5"	400	385	250	210	8	254	216	8	250	210	8	250	210	8
6"	480	410	280	240	8	279	241	8	285	240	8	285	240	8
8"	600	465	330	290	12	343	299	8	340	295	8	340	295	12
10"	730	530	400	355	12	406	362	12	395	350	12	405	355	12
12"	850	585	445	400	16	483	432	12	445	400	12	460	410	12

* Design, Dimensions and Materials are subject to change without notice. Copyright 2017 by APC INTERTRADE CO.,LTD.