S.A BRAND

BAO TIN STEEL CO., LTD

SIAM FITTINGS CO.,LTD.

STANDARD PACKING LISTS
PRODUCT SPECIFICATIONS

MANUFACTURER & EXPORTER
MALLEABLE IRON PIPE FITTINGS
GALVANIZED & BLACK
CLASS 150 lbs. & 300 lbs.

ISO 9001:2008 INTERNATIONAL STANDARD
QUALITY MANAGEMENT SYSTEM

PACKING LISTS and SPECIFICATION STANDARD

YOUR TRUST OUR SUCCESS
BTS
BAO TIN STEEL

BAO TIN STEEL CO., LTD

STANDARD SPECIFICATIONS MALLEABLE IRON PIPE FITTINGS

	American 150lbs/300lbs.	British 150lbs.	Din 150lbs.
Material	ASTM A197/A197M	Equivalent to	Equivalent to
- Tensile Strength	Min. 40,000 psi.(28.4 Kgf/mm.^{2})	EN1562 EN-GJMB-300-6	EN1562 EN-GJMB-300-6
- Elongation	Min.5%		
Dimension			
- Fitting Dimension	ASME B16.3	ASME B16.3	ASME B16.3
- Union Dimension			
1.Union Brass Seat	ASME B16.39	ASME B16.39	ASME B16.39
2. Union Iron to Iron	N/A		EN 10242
- Plug&Bushing Dimension	ASME B16.14	ASME B16.14	ASME B16.14
Threads	ASME B 1.20.1	ISO 7-1(Rc,R)	ISO 7-1(Rp,R)
Zinc Coating	ASTM A153/A153M	Sec 5.3 BS 143&1256	Sec 5.2 En10242
Working Pressure	150psi@350°F/300psi@550°F	150 psi @ 350°F	150 psi @ 350°F

ANSI American National Stardards Institute
ASTM STANDARDS INTERNATIONAL
BSI STANDARDS BRITISH STANDARD
Canadian Standards Association CSA B51-95
The American Society of Mechanical Engineers
ISO INTERNATIONAL STANDARD
DIN DEUTSCHE NORM
JIS JAPANESE INDUSTRIAL STANDARD

QUALITY SYSTEM ISO 9001:2008

SA QUALITY POLICY

S = Satisfy Customers.
I = Improvement Continually.
A = At acceptable price and cost.
M = Management Leadership.

All product and services provided by Siam Fittings Co., Ltd. Shall conform to the standard requirements and by our customers. Each employee is responsible for his or her input to the procurement, production, support, delivery service, corporate with supplier of management provided.

We are committed to continually improving all products and services and to maintain Siam Fittings as Quality Leader in our field, by Involvement of people, Leadership, Process approach, System approach to management and making decision base on fact.

Doc.NO.	S-MWH.-R.08
Issue / Rev.	C / 0
Issue Date	2 Oct 2009

YOUR TRUST OUR SUCCESS
BTS
BAO TIN STEEL
BAO TIN STEEL CO., LTD

MALLEABLE IRON PIPE FITTINGS CLASS 150 lbs.

ELBOWS 90°

AL 90, BL 90



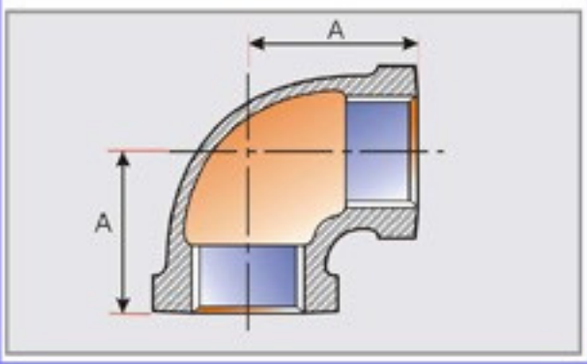

Size (inch)	Dimensions A	Inner Box Pcs./Box	Master Ctn. Pcs./Ctn.	NO.of Inner Box	Weight/Pcs.	N.W./Ctn. (Kgs.)
1/8	17.5	50	600	12	0.0306	18
1/4	20.6	35	420	12	0.0515	22
3/8	24.1	90	360	4	0.0710	26
1/2	28.4	50	200	4	0.1195	24
3/4	33.3	35	105	3	0.1865	20
1	38.1	20	60	3	0.2838	17
1 1/4	44.5	20	40	2	0.4504	18
1 1/2	49.3	15	30	2	0.5736	17
2	57.2	8	16	2	0.8932	14
2 1/2	68.6	-	12	1	1.4816	18
3	78.2	-	8	1	2.2560	20
3 1/2	86.9	-	4	1	3.1930	13
4	96.3	-	2	1	4.2200	8
5	114.3	-	2	1	6.7980	14
6	132.0	-	1	1	8.8690	9

*** THE ACTUAL WEIGHT CAN VARY BY ± 3%**

ELBOWS 45°

AL 45, BL 45



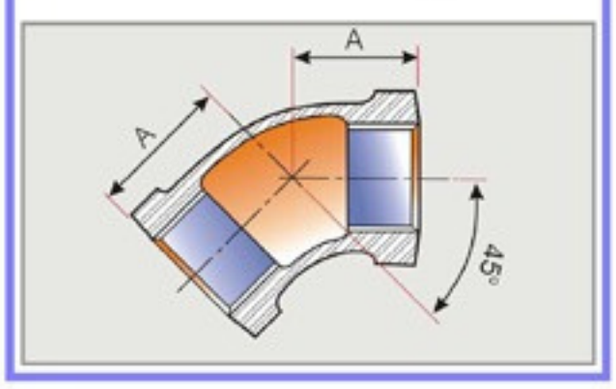

Size (inch)	Dimensions A	Inner Box Pcs./Box	Master Ctn. Pcs./Ctn.	NO.of Inner Box	Weight/Pcs.	N.W./Ctn. (Kgs.)
1/8	16.0	50	600	12	0.0245	15
1/4	18.5	30	360	12	0.0464	17
3/8	20.3	75	300	4	0.0676	20
1/2	22.3	50	200	4	0.1024	20
3/4	24.9	40	120	3	0.1628	20
1	28.4	20	60	3	0.2503	15
1 1/4	32.8	20	40	2	0.3467	14
1 1/2	36.3	10	30	3	0.5098	15
2	42.7	12	24	2	0.8008	19
2 1/2	49.5	-	12	1	1.2640	15
3	55.1	-	10	1	1.9436	19
4	66.3	-	4	1	3.4280	14
5	77.5	-	2	1	4.8500	10
6	87.9	-	1	1	6.7660	7

*** THE ACTUAL WEIGHT CAN VARY BY ± 3%**

STREET ELBOWS 90°

ASL 90, BSL 90



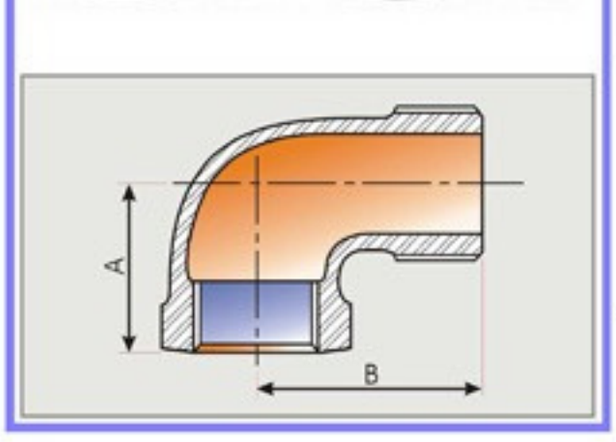

Size (inch)	Dimensions A	Dimensions B	Inner Box Pcs./Box	Master Ctn. Pcs./Ctn.	NO.of Inner Box	Weight/Pcs.	N.W./Ctn. (Kgs.)
1/8	17.5	25.4	60	720	12	0.0256	18
1/4	20.6	30.2	35	420	12	0.0440	18
3/8	24.1	36.6	60	240	4	0.0720	17
1/2	28.4	41.4	60	180	3	0.1070	19
3/4	33.3	48.0	35	105	3	0.1740	18
1	38.1	54.3	45	90	2	0.2693	24
1 1/4	44.5	62.2	25	50	2	0.4216	21
1 1/2	49.3	68.3	9	27	3	0.5734	15
2	57.2	82.8	8	16	2	1.0092	16
2 1/2	68.6	98.0	5	10	2	1.6400	16
3	78.2	114.5	-	8	1	2.4160	19
4	96.3	144.5	-	4	1	4.2400	17
5	114.3	174.2	-	1	1	5.5000	6
6	130.3	204.0	-	1	1	12.3666	12

*** THE ACTUAL WEIGHT CAN VARY BY ± 3%**

YOUR TRUST OUR SUCCESS
BTS
BAO TIN STEEL
BAO TIN STEEL CO., LTD

MALLEABLE IRON PIPE FITTINGS CLASS 150 lbs.

STREET ELBOWS 45°

ASL 45, BSL 45

Size (inch)	Dimensions A	Dimensions B	Inner Box Pcs./Box	Master Ctn. Pcs./Ctn.	NO.of Inner Box	Weight/Pcs.	N.W./Ctn. (Kgs.)
1/8	16.0	21.0	70	840	12	0.0243	20
1/4	18.5	23.9	40	480	12	0.0395	19
3/8	20.3	26.2	100	400	4	0.0582	23
1/2	22.3	33.0	75	225	3	0.0996	22
3/4	24.9	37.5	40	120	3	0.1436	17
1	28.4	43.0	25	75	3	0.2540	19
1 1/4	32.8	47.4	10	40	4	0.3546	14
1 1/2	36.3	51.7	10	30	3	0.5104	15
2	42.7	60.4	12	24	2	0.7944	19
2 1/2	49.5	69.0	6	12	2	1.3512	16
3	55.1	80.2	3	6	2	2.1280	13
4	66.3	99.0	-	4	1	3.3770	14



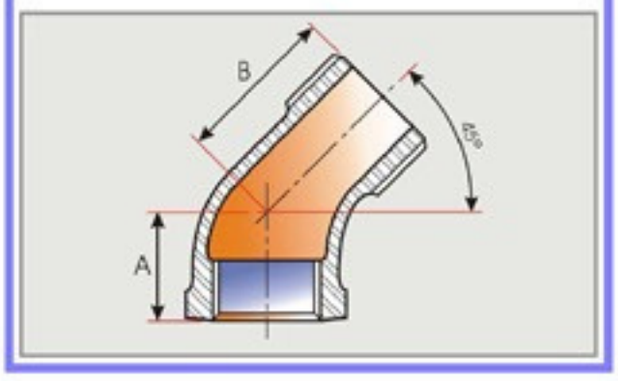

*** THE ACTUAL WEIGHT CAN VARY BY ± 3%**

TEES

AT, BT

Size (inch)	Dimensions A	Inner Box Pcs./Box	Master Ctn. Pcs./Ctn.	NO.of Inner Box	Weight/Pcs.	N.W./Ctn. (Kgs.)
1/8	17.5	120	480	4	0.0452	22
1/4	20.6	75	300	4	0.0702	21
3/8	24.1	45	180	4	0.1087	20
1/2	28.4	40	120	3	0.1686	20
3/4	33.3	35	70	2	0.2542	18
1	38.1	20	40	2	0.3998	16
1 1/4	44.5	14	28	2	0.6020	17
1 1/2	49.3	12	24	2	0.7254	17
2	57.2	8	16	2	1.2100	19
2 1/2	68.6	4	8	2	2.2133	18
3	78.2	-	6	1	2.9500	18
4	96.3	1	2	2	5.2920	11
5	114.3	-	1	1	9.1200	9
6	132.0	-	1	1	11.8133	12



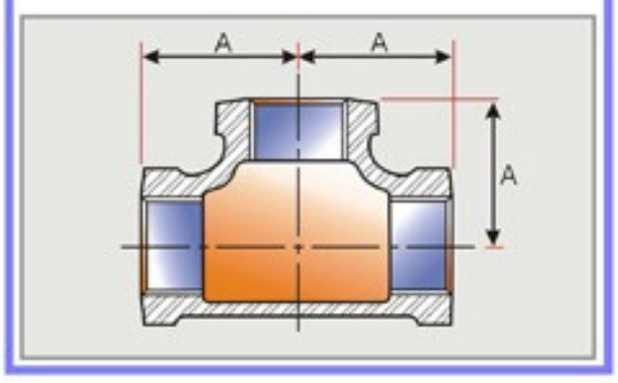

*** THE ACTUAL WEIGHT CAN VARY BY ± 3%**

SERVICE TEES

AST, BST

Size (inch)	Dimensions A	Dimensions B	Inner Box Pcs./Box	Master Ctn. Pcs./Ctn.	NO.of Inner Box	Weight/Pcs.	N.W./Ctn. (Kgs.)
1/2	28.4	41.4	40	120	3	0.1600	17
3/4	33.3	48.0	25	75	3	0.2480	19
1	38.1	54.3	20	40	2	0.4040	16
1 1/4	44.5	62.2	15	30	2	0.6460	19
1 1/2	49.3	68.3	12	24	2	0.8088	19
2	57.2	82.8	8	16	2	1.2900	21



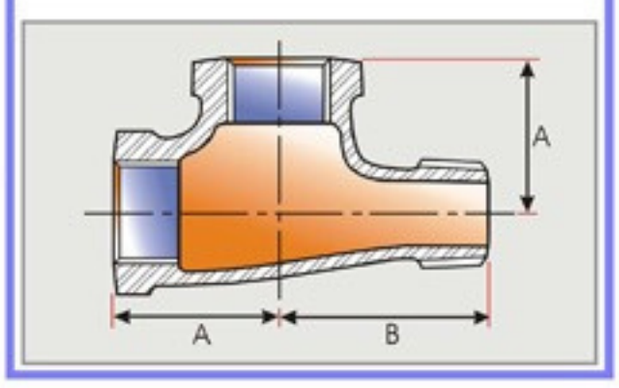

*** THE ACTUAL WEIGHT CAN VARY BY ± 3%**

YOUR TRUST OUR SUCCESS
BTS
BAO TIN STEEL
BAO TIN STEEL CO., LTD

MALLEABLE IRON PIPE FITTINGS CLASS 150 lbs.

SIDE OUTLET TEES

ASOT, BSOT



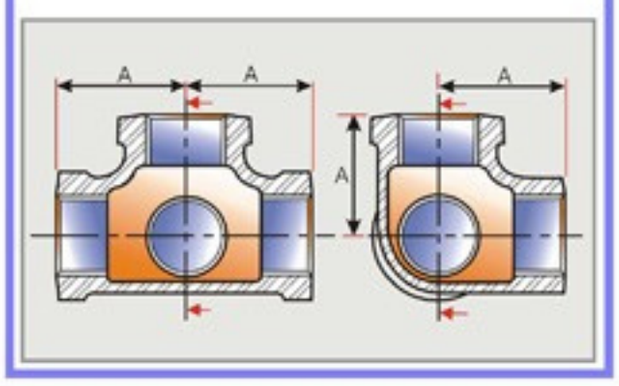

Size (inch)	Dimensions A	Inner Box Pcs./Box	Master Ctn. Pcs./Ctn.	NO.of Inner Box	Weight/Pcs.	N.W./Ctn. (Kgs.)
3/8	24.1	40	160	4	0.1140	18
1/2	28.4	25	100	4	0.1766	18
3/4	33.3	15	60	4	0.2750	17
1	38.1	20	40	2	0.4248	17
1 1/4	44.5	12	24	2	0.6300	15
1 1/2	49.3	8	16	2	0.7500	12
2	57.2	4	8	2	1.6580	13

*** THE ACTUAL WEIGHT CAN VARY BY ± 3%**

SIDE OUTLET ELBOWS

ASOL, BSOL



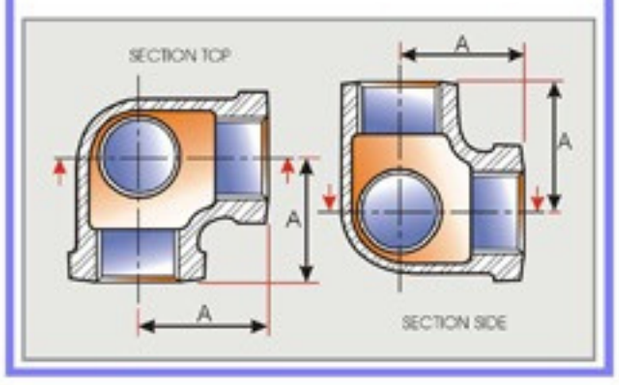

Size (inch)	Dimensions A	Inner Box Pcs./Box	Master Ctn. Pcs./Ctn.	NO.of Inner Box	Weight/Pcs.	N.W./Ctn. (Kgs.)
1/8	17.5	45	540	12	0.0390	21
1/4	20.6	75	300	4	0.0680	20
3/8	24.1	50	200	4	0.1050	21
1/2	28.4	45	135	3	0.1530	18
3/4	33.3	20	80	4	0.2130	17
1	38.1	20	40	2	0.3392	14
1 1/4	44.5	15	30	2	0.5914	18
1 1/2	49.3	12	24	2	0.6680	17
2	57.2	5	10	2	1.1260	11

*** THE ACTUAL WEIGHT CAN VARY BY ± 3%**

COUPLINGS

AS, BS



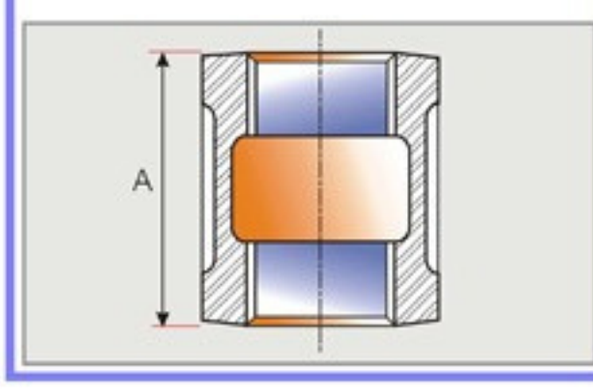

Size (inch)	Dimensions A	Inner Box Pcs./Box	Master Ctn. Pcs./Ctn.	NO.of Inner Box	Weight/Pcs.	N.W./Ctn. (Kgs.)
1/8	24.4	70	840	12	0.0250	21
1/4	26.9	40	480	12	0.0399	19
3/8	29.5	40	480	12	0.0574	28
1/2	34.0	60	240	4	0.0920	22
3/4	38.6	50	150	3	0.1330	20
1	42.4	25	100	4	0.2077	21
1 1/4	49.0	16	64	4	0.3164	20
1 1/2	54.6	18	36	2	0.4196	15
2	64.3	12	24	2	0.6556	16
2 1/2	73.2	8	16	2	1.0320	17
3	80.8	-	12	1	1.6377	20
4	93.7	3	6	2	2.6060	16
5	95.0	1	2	2	4.1800	8
6	102.5	-	2	1	4.1180	8

*** THE ACTUAL WEIGHT CAN VARY BY ± 3%**

YOUR TRUST OUR SUCCESS
BTS
BAO TIN STEEL
BAO TIN STEEL CO., LTD

MALLEABLE IRON PIPE FITTINGS CLASS 150 lbs.

EXTENSION

AX, BX

Size (inch)	Dimensions A	Inner Box Pcs./Box	Master Ctn. Pcs./Ctn.	NO.of Inner Box	Weight/Pcs.	N.W./Ctn. (Kgs.)
3/8	32	40	480	12	0.0480	23
1/2	40	75	300	4	0.0712	5
3/4	48	40	160	4	0.1400	20
1	55	30	90	3	0.1892	17
1 1/4	60	30	60	2	0.2872	17
1 1/2	65	20	40	2	0.3902	16
2	70	15	30	2	0.5990	18

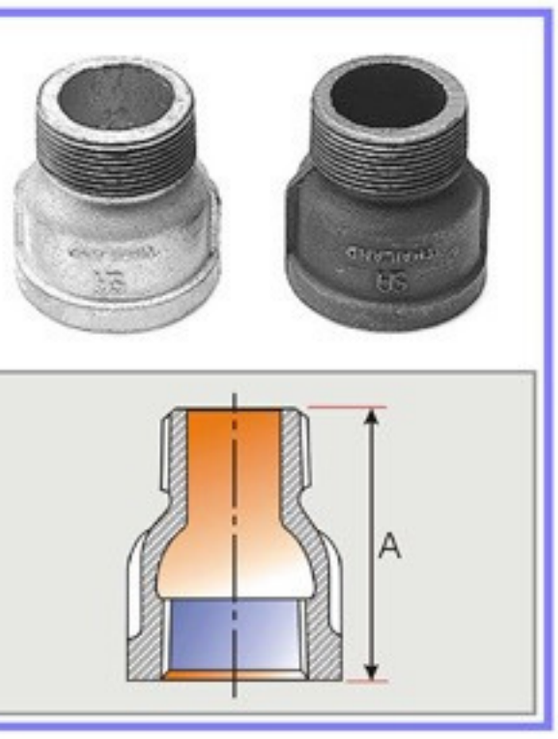

*** THE ACTUAL WEIGHT CAN VARY BY ± 3%**

CROSSES

ACR, BCR

Size (inch)	Dimensions A	Inner Box B	Master Ctn. Pcs./Box	NO.of Pcs./Ctn.	Weight/Pcs. Inner Box	N.W./Ctn. (Kgs.)
1/8	17.5	30	360	12	0.0520	19
1/4	20.6	60	240	4	0.0881	21
3/8	24.1	50	150	3	0.1310	20
1/2	28.4	30	90	3	0.1980	18
3/4	33.3	20	60	3	0.3006	18
1	38.1	15	30	2	0.4642	14
1 1/4	44.5	10	20	2	0.7200	14
1 1/2	49.3	8	16	2	0.9384	15
2	57.2	5	10	2	1.4200	14
2 1/2	68.6	3	6	2	2.4520	15
3	78.2	2	4	2	3.7440	15
4	96.3	1	2	2	6.2900	13
5	114.3	-	1	1	8.0000	8
6	132.0	-	1	1	13.0000	13

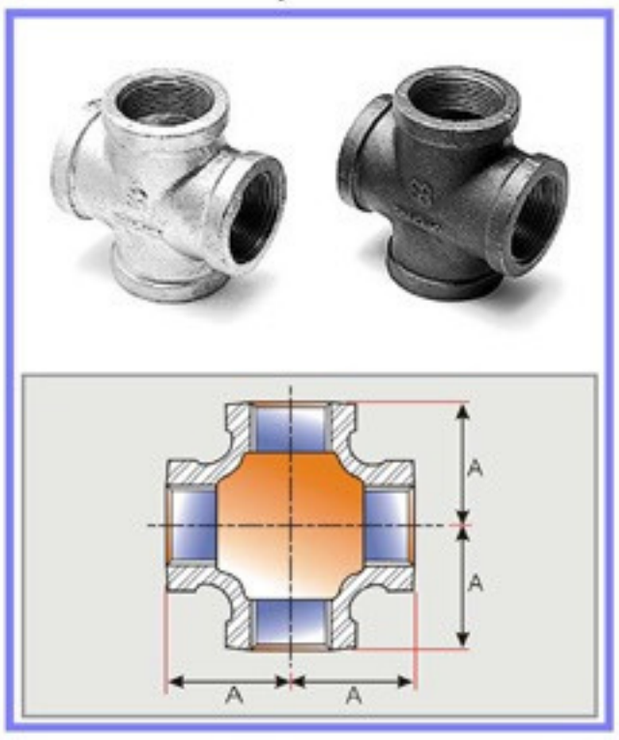

*** THE ACTUAL WEIGHT CAN VARY BY ± 3%**

REDUCING CROSSES

ARCR, BRCR

Size (inch)	Dimensions A	B	Inner Box Pcs./Box	Master Ctn. Pcs./Ctn.	NO.of Inner Box	Weight/Pcs.	N.W./Ctn. (Kgs.)
1 1/2 X 1 1/4	46.2	47.8	9	18	2	0.9060	16
2 X 1 1/4	48.3	53.3	5	10	2	1.1380	11
2 1/2 X 1 1/4	52.0	62.0	4	8	2	1.4510	12
2 1/2 X 1 1/2	56.0	63.0	4	8	2	1.5430	12

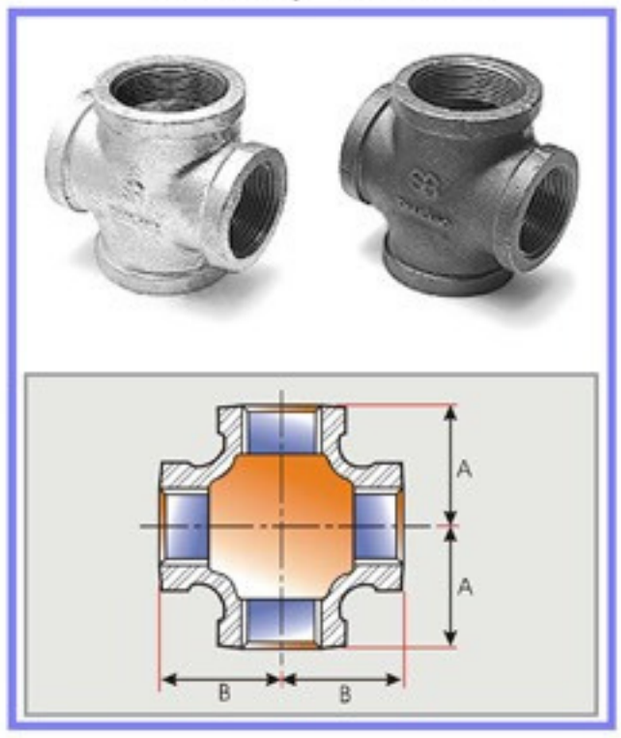

*** THE ACTUAL WEIGHT CAN VARY BY ± 3%**

YOUR TRUST OUR SUCCESS
BTS
BAO TIN STEEL
BAO TIN STEEL CO., LTD

MALLEABLE IRON PIPE FITTINGS CLASS 150 lbs.

FLOOR FLANGES, FLANGES "D"

AFF, FD

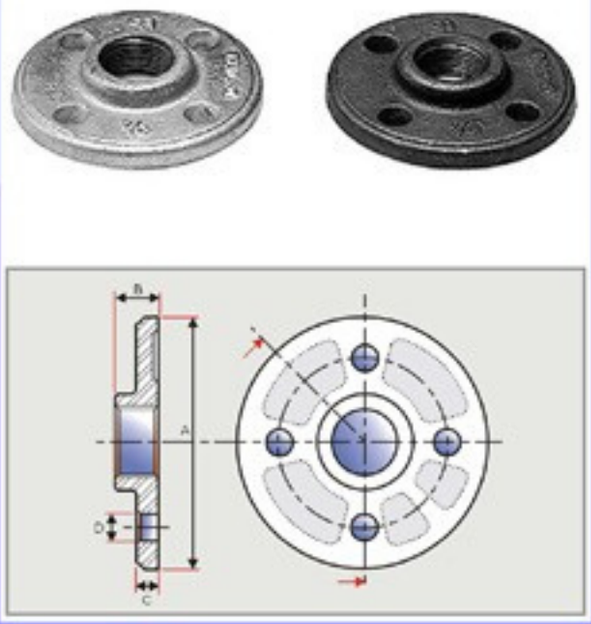

Size (inch)	Dimensions A	B	C	D	Inner Box Pcs./Box	Master Ctn. Pcs./Ctn.	NO.of Inner Box	Weight/Pcs.	N.W./Ctn. (Kgs.)
3/8	88.9	14.3	7.2	6.4	25	75	3	0.3020	21
1/2	88.9	14.3	7.2	6.4	25	50	2	0.3006	15
3/4	88.9	15.9	7.9	6.4	15	45	3	0.3258	15
1	101.6	17.5	8.7	6.4	15	30	2	0.4444	13
1 1/4	101.6	19.1	8.7	6.4	10	30	3	0.4630	14
1 1/2	114.3	22.2	9.5	8.0	8	24	3	0.6172	15
2	139.7	25.4	10.3	8.0	8	16	2	0.9938	16
2 1/2	165.0	40.0	17.0	18.0	4	12	3	1.2400	15
3	185.0	44.0	19.0	18.0	4	8	2	1.7100	14
4	215.0	38.5	10.5	18.0	3	6	2	2.5890	16
5	255.0	32.5	13.5	19.0	-	4	1	4.3620	17
6	280.0	34.0	15.0	18.0	-	4	1	5.5786	22

*** THE ACTUAL WEIGHT CAN VARY BY ± 3%**

ROUND FLANGES

F

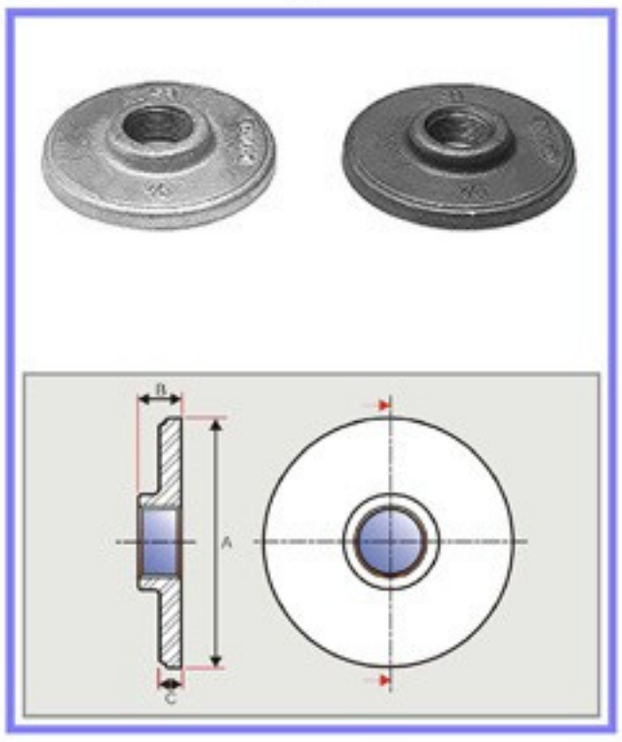

Size (inch)	Dimensions A	B	C	Inner Box Pcs./Box	Master Ctn. Pcs./Ctn.	NO.of Inner Box	Weight/Pcs.	N.W./Ctn. (Kgs.)
1/2	95.0	15	5.0	25	50	2	0.2860	14
3/4	102.0	14	5.0	15	45	3	0.3400	15
1	114.0	16	5.0	15	30	2	0.4830	14
1 1/4	120.0	18	6.5	10	30	3	0.4900	15
1 1/2	133.0	19	6.5	8	24	3	0.6480	16
2	152.0	21	8.0	8	16	2	1.0150	16
2 1/2	165.0	24	8.0	4	12	3	1.2400	15
3	-	-	-	4	8	2	1.7100	14
4	-	-	-	3	6	2	2.5890	16
5	254.6	45	15.0	-	4	1	4.0000	16
6	284.0	50	15.0	-	4	1	5.5786	22

*** THE ACTUAL WEIGHT CAN VARY BY ± 3%**

LOCKNUTS

ALN, LN

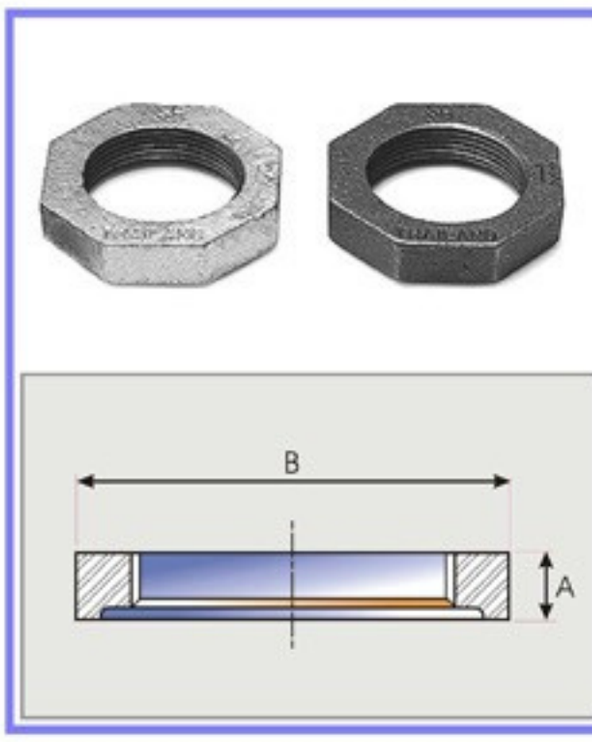

Size (inch)	Dimensions A	B	Inner Box Pcs./Box	Master Ctn. Pcs./Ctn.	NO.of Inner Box	Weight/Pcs.	N.W./Ctn. (Kgs.)
1/8	5.0	17.5	250	3000	12	0.0080	24
1/4	6.6	21.3	125	1500	12	0.0117	18
3/8	7.3	25.4	125	1500	12	0.0150	23
1/2	8.1	30.0	150	600	4	0.0387	23
3/4	8.8	36.3	90	360	4	0.0526	19
1	9.9	44.5	60	240	4	0.0826	20
1 1/4	10.9	53.3	45	180	4	0.1220	22
1 1/2	12.1	59.7	45	135	3	0.2084	28
2	13.7	73.2	25	75	3	0.2680	19
2 1/2	15.2	98.0	20	40	2	0.5150	21
3	17.2	117.3	20	40	2	0.6090	24
4	20.5	147.1	7	14	2	0.7530	11
5	-	-	5	10	2	2.1980	22
6	30.9	210	4	8	2	3.1920	26

*** THE ACTUAL WEIGHT CAN VARY BY ± 3%**

YOUR TRUST OUR SUCCESS
BTS
BAO TIN STEEL
BAO TIN STEEL CO., LTD

MALLEABLE IRON PIPE FITTINGS CLASS 150 lbs.

WASTENUTS

AWN

Size (inch)	Dimensions A	B	C	D	E	Inner Box Pcs./Box	Master Ctn. Pcs./Ctn.	NO.of Inner Box	Weight. /Pcs	N.W./Ctn. (Kgs.)
1/2	62.0	6.0	4.4	46.0	6.0	90	360	4	0.0540	19
3/4	73.0	10.5	5.0	54.0	7.3	80	240	3	0.0800	19
1	84.1	11.2	4.8	65.1	7.2	50	200	4	0.0960	19
1 1/4	100.0	12.7	5.6	77.8	8.7	30	120	4	0.1450	17
1 1/2	109.5	14.3	6.4	87.3	8.7	50	100	2	0.1890	19
2	130.2	16.0	7.2	104.8	8.7	30	60	2	0.2850	17



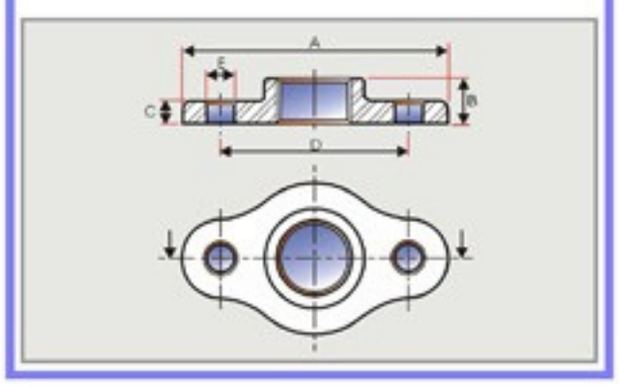

* THE ACTUAL WEIGHT CAN VARY BY ± 3%

CAPS

ACA, BCA

Size (inch)	Dimensions A	Inner Box Pcs./Box	Master Ctn. Pcs./Ctn.	NO.of Inner Box	Weight/Pcs.	N.W./Ctn. (Kgs.)
1/8	13.5	120	1440	12	0.0161	23
1/4	16.0	80	960	12	0.0245	24
3/8	18.8	60	720	12	0.0347	25
1/2	22.1	75	300	4	0.0575	17
3/4	24.6	40	160	4	0.0966	15
1	29.5	25	100	4	0.1424	14
1 1/4	32.5	20	80	4	0.2008	16
1 1/2	33.8	18	54	3	0.2528	14
2	36.8	12	36	3	0.4220	15
2 1/2	43.2	20	40	2	0.7270	29
3	45.7	-	24	1	1.0684	26
3 1/2	48.3	6	12	2	1.4680	18
4	52.8	6	12	2	1.7672	21
5	58.9	5	10	2	2.8600	29
6	64.8	2	4	2	4.7733	19



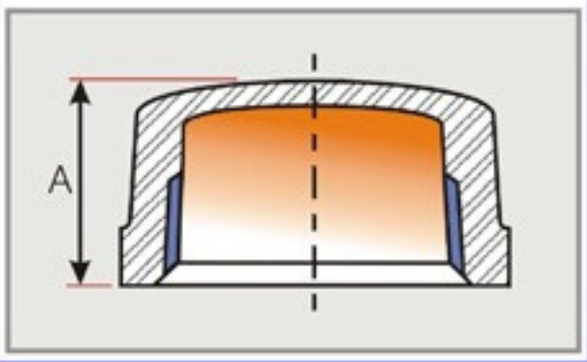

* THE ACTUAL WEIGHT CAN VARY BY ± 3%

PLUGS

AP, P

Size (inch)	Dimensions A	B	C	Inner Box Pcs./Box	Master Ctn. Pcs./Ctn.	NO.of Inner Box	Weight/Pcs.	N.W./Ctn. (Kgs.)
1/8	9.8	6.1	7.1	300	3.600	12	0.0058	21
1/4	11.6	7.1	9.5	150	1.800	12	0.0149	27
3/8	12.6	8.0	11.0	100	1.200	12	0.0220	26
1/2	14.7	9.7	14.3	50	600	12	0.0414	22
3/4	16.5	11.2	15.9	30	360	12	0.0660	21
1	19.1	12.7	20.9	20	240	12	0.1100	22
1 1/4	20.9	14.2	23.8	40	120	3	0.1840	21
1 1/2	21.7	15.8	28.6	30	90	3	0.2500	20
2	23.2	17.3	33.3	20	60	3	0.3840	21
2 1/2	32.0	18.8	38.1	16	32	2	0.5091	16
3	29.4	20.3	42.9	16	32	2	0.7532	24
4	31.0	25.4	58.0	6	12	2	1.4873	18
5	33.3	25.4	67.0	5	10	2	2.0320	20
6	35.6	31.8	77.0	5	10	2	2.7320	27



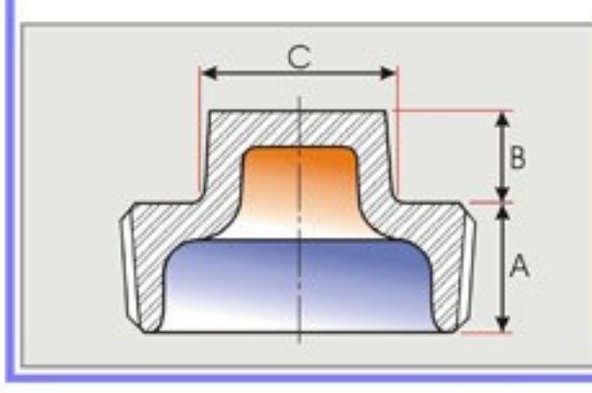

* THE ACTUAL WEIGHT CAN VARY BY ± 3%

YOUR TRUST OUR SUCCESS
BTS
BAO TIN STEEL
BAO TIN STEEL CO., LTD

MALLEABLE IRON PIPE FITTINGS CLASS 150 lbs.

NIPPLES

NI

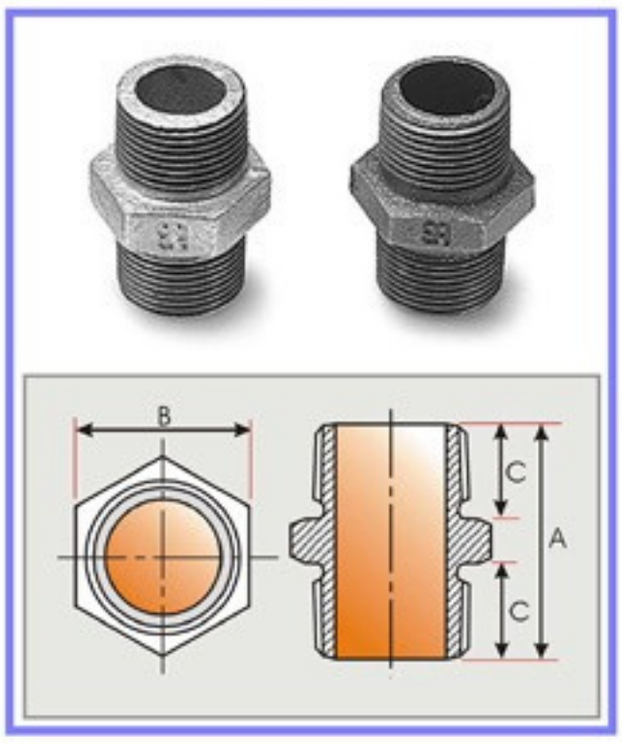

Size (inch)	Dimensions A	B	C	Inner Box Pcs./Box	Master Ctn. Pcs./Ctn.	NO.of Inner Box	Weight/Pcs.	N.W./Ctn. (Kgs.)
1/8	32	14	11.0	240	960	4	0.0220	21
1/4	34	17	12.0	200	800	4	0.0260	21
3/8	36	21	13.0	150	600	4	0.0410	25
1/2	45	27	18.5	80	320	4	0.0692	22
3/4	48	32	19.5	60	180	3	0.1056	20
1	53	38	21.5	40	120	3	0.1560	19
1 1/4	56	48	23.0	35	70	2	0.2226	19
1 1/2	60	55	24.0	25	50	2	0.3360	17
2	70	70	28.0	18	36	2	0.6112	22
2 1/2	76	85	31.0	10	20	2	0.8636	17
3	84	100	34.0	6	12	2	1.2865	15
4	95	130	38.5	3	6	2	1.8512	11
5	104	145	44.0	2	4	2	2.6390	11
6	116	170	46.0	-	3	1	3.9510	12

*** THE ACTUAL WEIGHT CAN VARY BY ± 3%**

UNIONS CONICAL BRASS SEAT

ACU, BCU

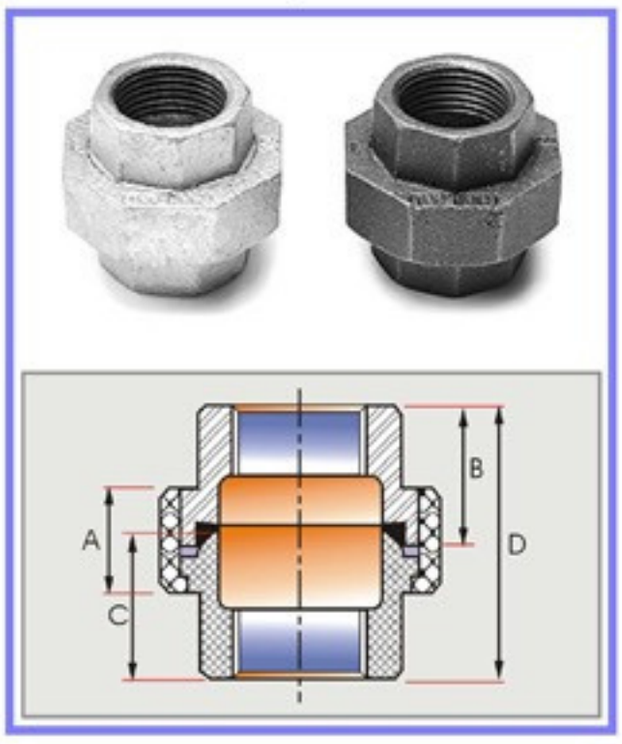

Size (inch)	Dimensions A	B	C	D	Inner Box Pcs./Box	Master Ctn. Pcs./Ctn.	NO.of Inner Box	Weight/Pcs.	N.W./Ctn. (Kgs.)
1/8	14.0	16.5	17.50	32.0	60	240	4	0.0579	14
1/4	15.5	18.5	20.25	36.6	20	240	12	0.0950	23
3/8	16.0	21.0	22.75	40.9	40	160	4	0.1567	25
1/2	17.0	23.0	25.25	43.7	50	100	2	0.1951	20
3/4	18.5	25.5	27.75	49.3	35	70	2	0.2730	19
1	20.0	27.0	30.00	52.3	20	40	2	0.4130	17
1 1/4	24.0	30.0	35.00	57.4	15	30	2	0.6168	19
1 1/2	25.5	33.0	38.00	61.2	10	20	2	0.7960	16
2	27.0	37.0	41.00	69.8	6	12	2	1.2096	15
2 1/2	29.5	42.0	45.50	81.8	4	8	2	2.0320	16
3	32.5	47.0	50.00	88.9	4	8	2	2.7010	22
4	39.0	58.0	60.50	97.8	2	4	2	4.5850	18

*** THE ACTUAL WEIGHT CAN VARY BY ± 3%**

REDUCING UNIONS

ARCU

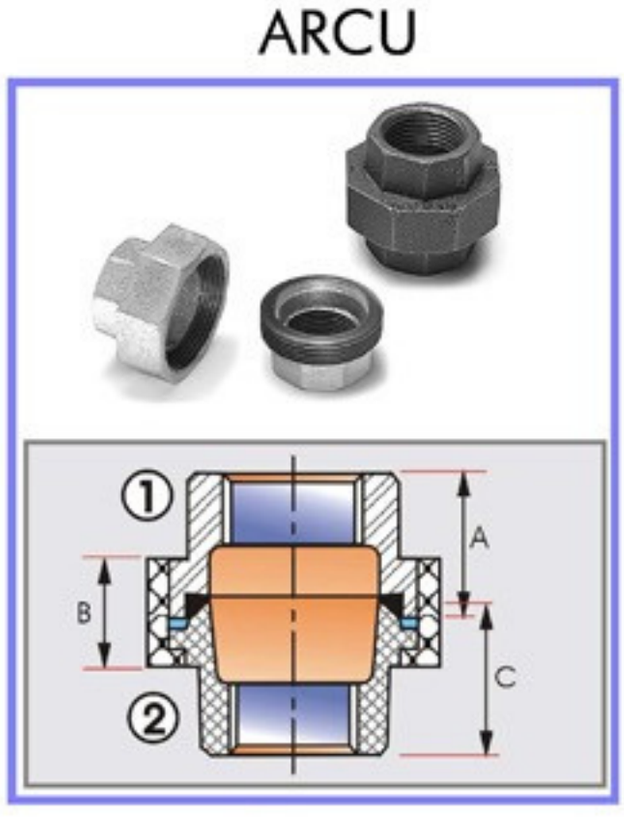

Size (inch)1x2	Dimensions A	B	C	Inner Box Pcs./Box	Master Ctn. Pcs./Ctn.	NO.of Inner Box	Weight/Pcs.	N.W./Ctn. (Kgs.)
3/4 X 1/2	22.5	18.5	27.75	30	90	3	0.3050	27

*** THE ACTUAL WEIGHT CAN VARY BY ± 3%**

YOUR TRUST OUR SUCCESS
BTS
BAO TIN STEEL
BAO TIN STEEL CO., LTD

MALLEABLE IRON PIPE FITTINGS CLASS 150 lbs.

UNIONS FLAT SEAT WITHOUT GASKET

U

Size (inch)	Dimensions A	B	C	Inner Box Pcs./Box	Master Ctn. Pcs./Ctn.	NO.of Inner Box	Weight/Pcs.	N.W./Ctn. (Kgs.)
1/4	18.3	15.5	19.0	20	240	12	0.0930	22
3/8	19.0	16.0	20.5	40	160	4	0.1598	26
1/2	21.0	17.0	24.5	50	100	2	0.1960	20
3/4	24.5	18.5	26.5	35	70	2	0.2850	20
1	27.0	20.0	29.0	20	40	2	0.4130	17
1 1/4	30.0	24.0	34.0	15	30	2	0.6144	18
1 1/2	33.0	25.5	37.5	10	20	2	0.7940	16
2	37.0	37.0	40.0	6	12	2	1.1900	14
2 1/2	42.0	29.5	49.5	4	8	2	2.0000	16
3	47.0	32.5	49.5	4	8	2	2.5590	20
4	58.0	39.0	60.5	2	4	2	4.6874	19
6	73.0	49.0	73.0	-	2	1	11.1200	22

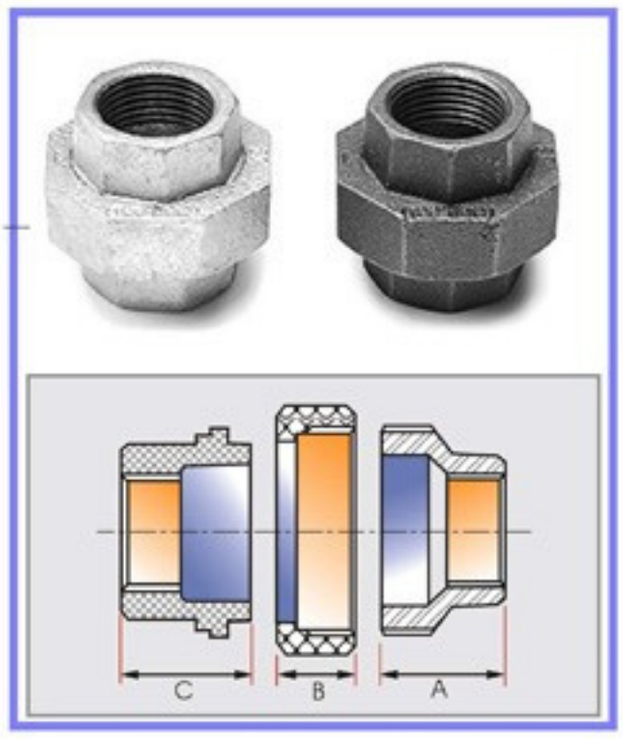

*** THE ACTUAL WEIGHT CAN VARY BY ± 3%**

UNIONS CONICAL IRON TO IRON SEAT

U340

Size (inch)	Dimensions A	B	C	Inner Box Pcs./Box	Master Ctn. Pcs./Ctn.	NO.of Inner Box	Weight/Pcs.	N.W./Ctn. (Kgs.)
1/2	26.0	19.0	30.0	50	100	2	0.1990	20
3/4	28.0	20.0	30.5	35	70	2	0.2860	20
1	31.0	22.0	34.0	20	40	2	0.3480	14
1 1/4	33.0	24.0	40.0	15	30	2	0.6040	18
1 1/2	36.0	25.0	42.5	10	20	2	0.7180	14
2	42.0	27.0	46.0	6	12	2	1.0740	13
2 1/2	44.0	33.5	51.5	4	8	2	2.0000	16

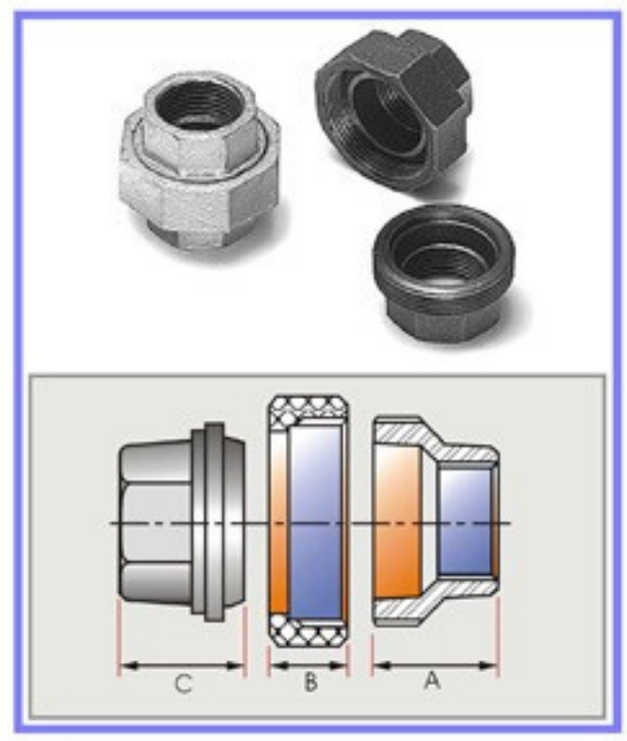

*** THE ACTUAL WEIGHT CAN VARY BY ± 3%**

UNIONS CONICAL IRON TO IRON SEAT, M & F

U341

Size (inch)	Dimensions A	B	C	Inner Box Pcs./Box	Master Ctn. Pcs./Ctn.	NO.of Inner Box	Weight/Pcs.	N.W./Ctn. (Kgs.)
1/2	26.0	19.0	30.0	50	100	2	0.2520	25
3/4	28.0	20.0	30.5	35	70	2	0.3260	23
1	31.0	22.0	34.0	20	40	2	0.4080	16
1 1/4	33.0	24.0	40.0	15	30	2	0.7150	21
1 1/2	36.0	27.0	42.5	10	20	2	0.8720	17
2	42.0	27.0	46.0	6	12	2	1.0130	12

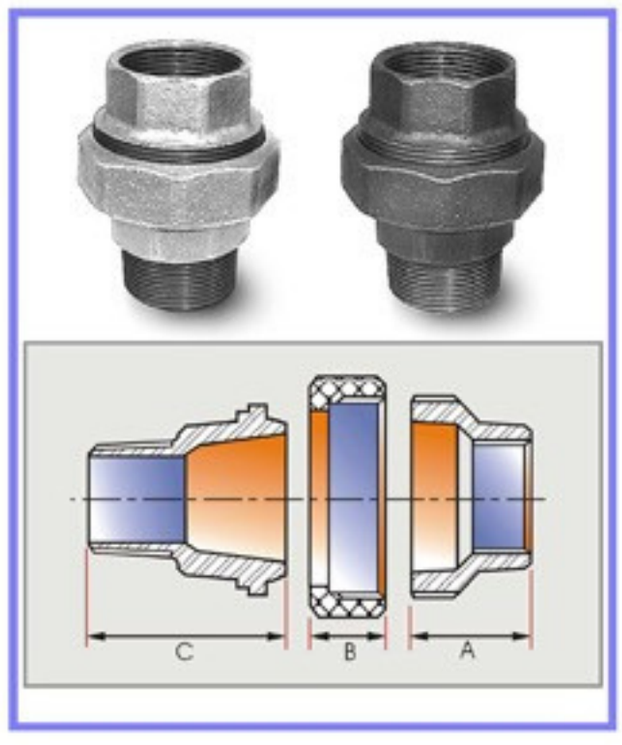

*** THE ACTUAL WEIGHT CAN VARY BY ± 3%**

YOUR TRUST OUR SUCCESS
BTS
BAO TIN STEEL
BAO TIN STEEL CO., LTD

MALLEABLE IRON PIPE FITTINGS CLASS 150 lbs.

LONG COMPRESSION, COUPLINGS

ALCC



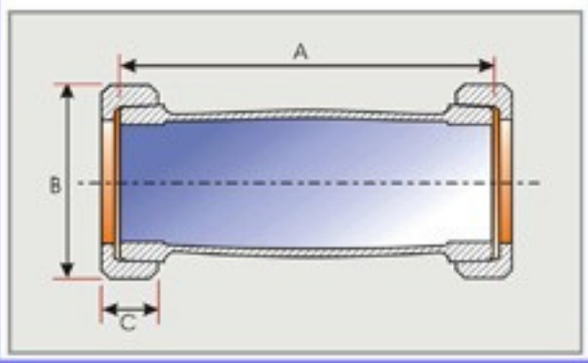

Size (inch)	Dimensions A	B	C	Inner Box Pcs./Box	Master Ctn. Pcs./Ctn.	NO.of Inner Box	Weight/Pcs.	N.W./Ctn. (Kgs.)
1/2	78.0	48.0	15.0	20	40	2	0.4000	16
3/4	86.5	54.0	16.0	15	30	2	0.5200	16
1	97.0	57.0	17.0	10	20	2	0.6720	13
1 1/4	107.0	67.0	18.0	10	20	2	0.9300	19
1 1/2	115.0	76.0	18.0	6	12	2	1.1500	14
2	127.0	89.0	19.0	5	10	2	1.6600	17

*** THE ACTUAL WEIGHT CAN VARY BY ± 3%**

SHORT COMPRESSION COUPLINGS

ASLCC



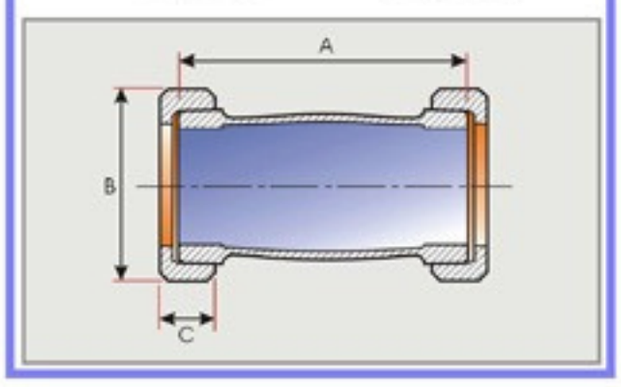

Size (inch)	Dimensions A	B	C	Inner Box Pcs./Box	Master Ctn. Pcs./Ctn.	NO.of Inner Box	Weight/Pcs.	N.W./Ctn. (Kgs.)
1/2	59.0	48.0	15.0	25	75	3	0.3020	23
3/4	64.5	54.0	16.0	20	60	3	0.4060	24
1	69.0	57.0	17.0	18	36	2	0.5130	9
1 1/4	74.0	67.0	18.0	10	20	2	0.6970	14
1 1/2	79.0	76.0	18.0	12	24	2	0.8650	21
2	84.0	89.0	19.0	6	12	2	1.2000	14
2 1/2	94.0	109.0	26.0	4	8	2	2.0800	17
3	104.0	135.7	26.0	2	4	2	2.7900	11

*** THE ACTUAL WEIGHT CAN VARY BY ± 3%**

BENDS M & F 90°

BMF 90



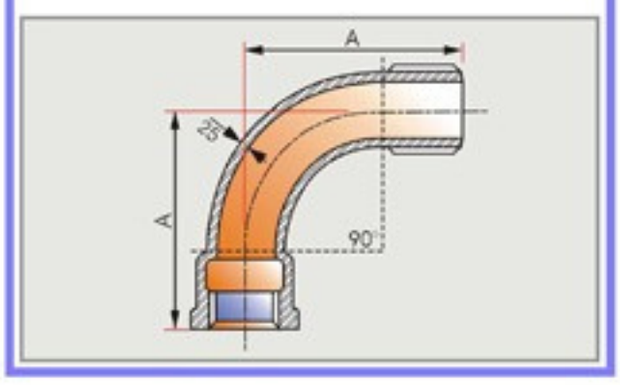

Size (inch)	Dimensions A	Inner Box Pcs./Box	Master Ctn. Pcs./Ctn.	NO.of Inner Box	Weight/Pcs.	N.W./Ctn. (Kgs.)
1/4	38	100	400	4	0.0570	23
3/8	44	60	240	4	0.0810	19
1/2	52	40	160	4	0.1190	19
3/4	65	40	80	2	0.2160	17
1	82	20	40	2	0.3678	15
1 1/4	100	14	28	2	0.6020	17
1 1/2	115	9	18	2	0.7960	14
2	140	5	10	2	1.3528	14
2 1/2	175	-	6	1	2.6860	16
3	205	-	3	1	3.4190	10
4	260	-	1	1	7.4200	7
5	318	-	1	1	17.2000	17
6	375	-	1	1	23.0000	23

*** THE ACTUAL WEIGHT CAN VARY BY ± 3%**

YOUR TRUST OUR SUCCESS
BTS
BAO TIN STEEL
BAO TIN STEEL CO., LTD

MALLEABLE IRON PIPE FITTINGS CLASS 150 lbs.

BENDS M & F 45°

BMF 45

Size (inch)	Dimensions A	Inner Box Pcs./Box	Master Ctn. Pcs./Ctn.	NO.of Inner Box	Weight/Pcs	N.W./Ctn. (Kgs.)
1/2	38	60	180	4	0.1180	21
3/4	45	30	90	3	0.1950	18
1	55	25	50	2	0.3150	16
1 1/4	63	15	30	2	0.4850	15
1 1/2	70	12	24	2	0.6400	15
2	85	6	12	2	1.1000	13
2 1/2	100	3	6	2	1.7000	10
3	115	2	4	2	2.6500	11
4	145	-	2	1	6.4000	13
5	170	-	1	1	8.6000	9
6	195	-	1	1	13.3300	13

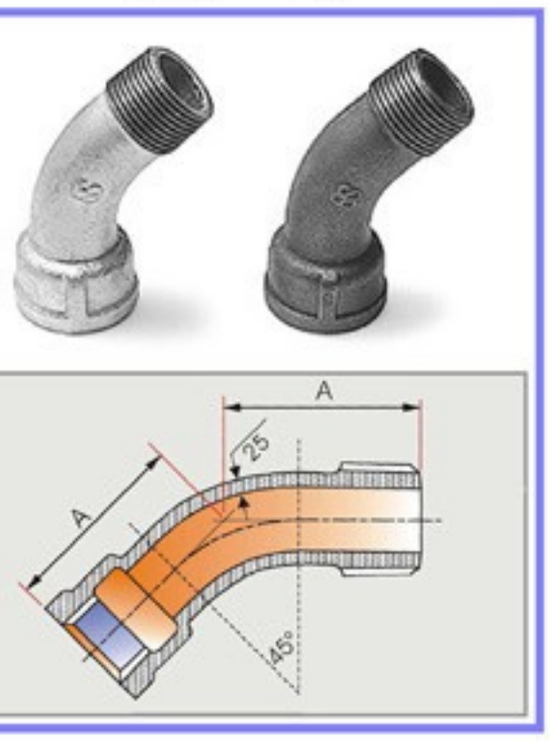

*** THE ACTUAL WEIGHT CAN VARY BY ± 3%**

BENDS FEMALE 90°

BF 90

Size (inch)	Dimensions A	Inner Box Pcs./Box	Master Ctn. Pcs./Ctn.	NO.of Inner Box	Weight/Pcs.	N.W./Ctn. (Kgs.)
1/2	52	40	160	4	0.1510	24
3/4	65	40	80	2	0.2700	22
1	82	24	48	2	0.4256	20
1 1/4	100	12	24	2	0.7740	19
1 1/2	115	9	18	2	0.8920	16
2	140	-	10	1	1.5036	15
2 1/2	175	-	4	1	2.9200	12
3	205	-	3	1	4.1662	12
4	260	-	1	1	9.5000	10
6	375	-	1	1	22.0000	22

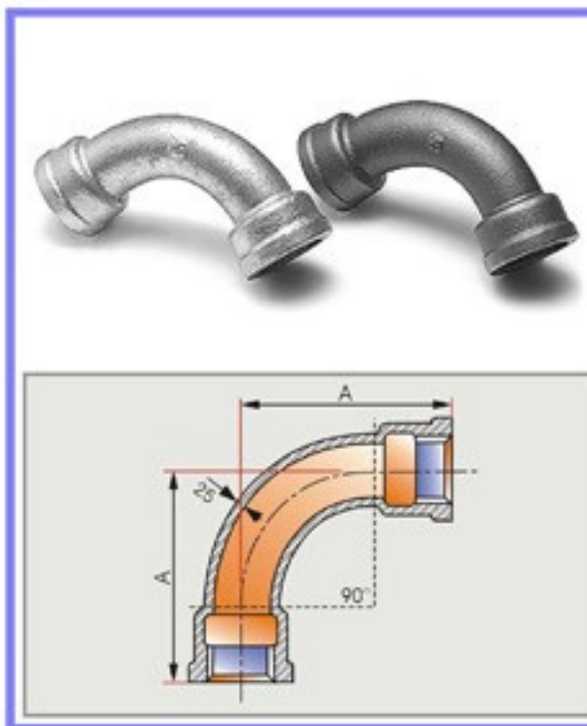

*** THE ACTUAL WEIGHT CAN VARY BY ± 3%**

BENDS FEMALE 45°

BF 45

Size (inch)	Dimensions A	Inner Box Pcs./Box	Master Ctn. Pcs./Ctn.	NO.of Inner Box	Weight/Pcs.	N.W./Ctn. (Kgs.)
1/2	38	60	180	3	0.1520	27
3/4	45	30	90	3	0.2100	19
1	55	25	50	2	0.3650	18
1 1/4	63	15	30	2	0.5800	17
1 1/2	70	12	24	2	0.7200	17
2	81.5	6	12	2	1.1660	14
2 1/2	100	3	6	2	2.3250	14
3	115	2	4	2	2.9500	12
4	145	-	2	1	6.4000	13

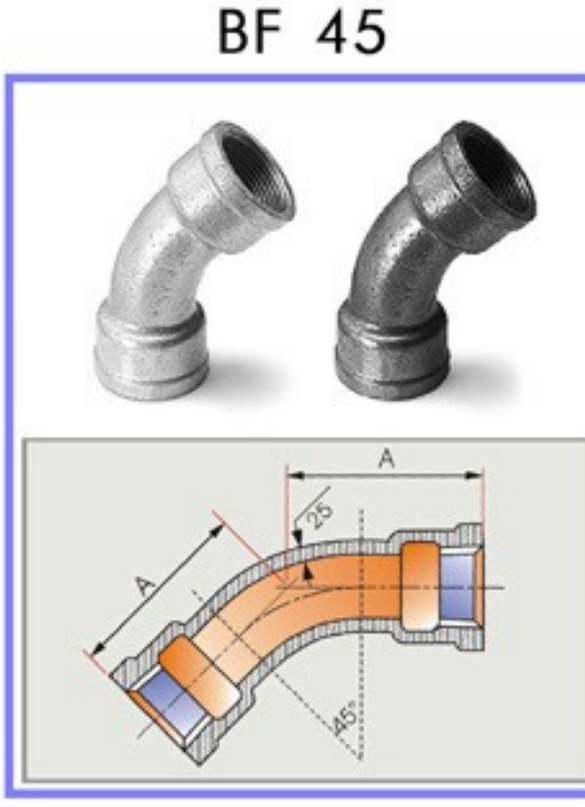

*** THE ACTUAL WEIGHT CAN VARY BY ± 3%**

YOUR TRUST OUR SUCCESS
BTS
BAO TIN STEEL

MALLEABLE IRON PIPE FITTINGS CLASS 150 lbs.

BAO TIN STEEL CO., LTD

CROSS OVER

NOS

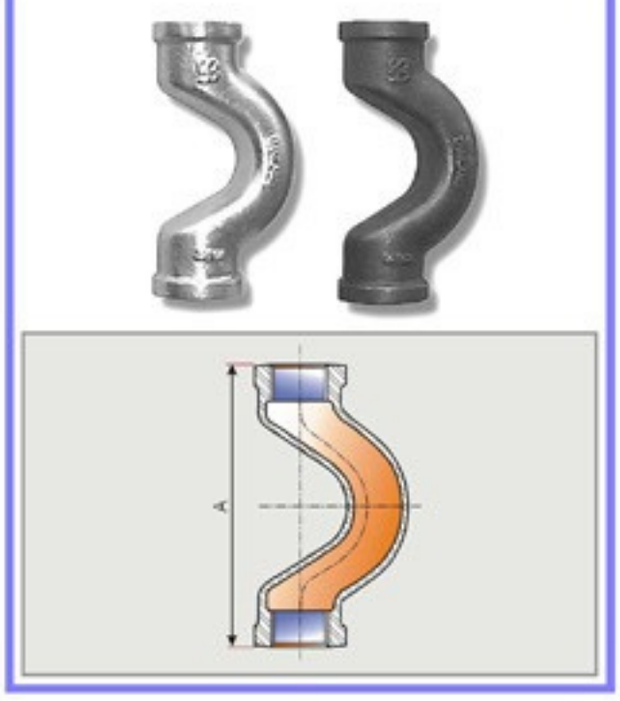

Size (inch)	Dimensions A	Inner Box Pcs./Box	Master Ctn. Pcs./Ctn.	NO.of Inner Box	Weight/Pcs.	N.W./Ctn. (Kgs.)
1/2	92	20	80	4	0.2090	17
3/4	112	25	50	2	0.3450	17

*** THE ACTUAL WEIGHT CAN VARY BY ± 3%**

REDUCING ELBOWS

ARL , BRL

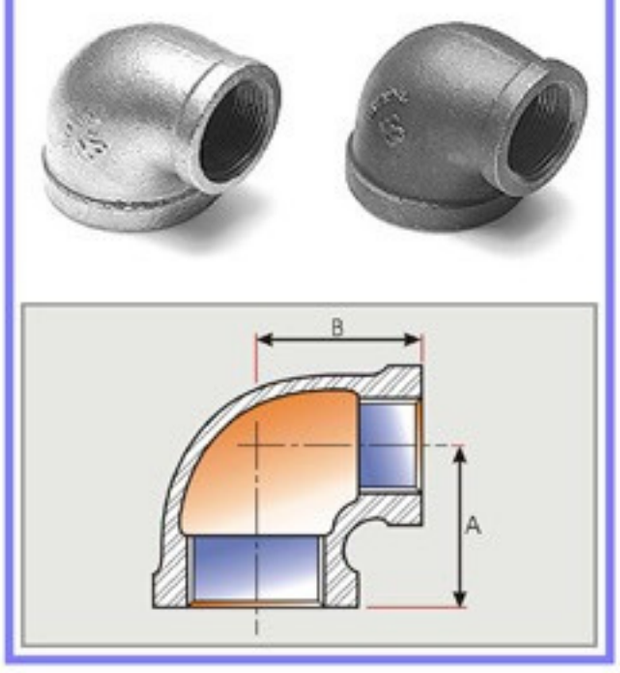

Size (inch)	Dimensions A	Dimensions B	Inner Box Pcs./Box	Master Ctn. Pcs./Ctn.	NO.of Inner Box	Weight/Pcs.	N.W./Ctn. (Kgs.)
1/4 X 1/8	18.8	19.3	40	480	12	0.0400	21
3/8 X 1/8	20.5	21.6	105	420	4	0.0580	24
3/8 X 1/4	22.4	22.9	90	360	4	0.0628	23
1/2 X 1/8	26.4	26.2	60	240	4	0.0700	17
1/2 X 1/4	24.6	24.9	60	240	4	0.0800	19
1/2 X 3/8	26.4	26.2	60	240	4	0.0944	23
3/4 X 1/8	26.2	25.7	40	160	4	0.1050	17
3/4 X 1/4	26.7	27.4	40	160	4	0.1110	18
3/4 X 3/8	28.5	28.7	40	160	4	0.1330	21
3/4 X 1/2	30.5	31.0	40	160	4	0.1493	24
1 X 1/4	30.0	32.0	25	100	4	0.1580	16
1 X 3/8	30.0	32.3	25	100	4	0.1770	18
1 X 1/2	32.0	35.5	25	100	4	0.1976	20
1 X 3/4	34.8	36.8	50	100	2	0.2460	25
1 1/4 X 1/2	34.0	38.9	20	80	4	0.2800	22
1 1/4 X 3/4	36.8	41.2	15	60	4	0.3060	18
1 1/4 X 1	40.1	42.4	10	40	4	0.3710	15
1 1/2 X 1/2	35.0	42.0	15	60	4	0.3436	21
1 1/2 X 3/4	38.6	44.5	10	40	4	0.4000	16
1 1/2 X 1	41.9	45.7	10	40	4	0.4160	17
1 1/2 X 1 1/4	46.2	47.8	15	30	2	0.5380	16
2 X 1/2	37.6	47.5	10	40	4	0.4520	18
2 X 3/4	40.6	50.0	9	36	4	0.5680	20
2 X 1	43.9	51.3	14	28	2	0.6476	18
2 X 1 1/4	48.3	53.3	10	20	2	0.6888	14
2 X 1 1/2	51.3	54.9	10	20	2	0.7380	15
2 1/2 X 1/2	45.0	60.0	10	20	2	0.7900	16
2 1/2 X 3/4	48.0	60.0	10	20	2	0.7900	16
2 1/2 X 1	55.0	63.0	8	16	2	0.9900	16
2 1/2 X 1 1/4	51.5	61.4	8	16	2	1.0200	16
2 1/2 X 1 1/2	54.9	63.8	6	12	2	1.0000	12
2 1/2 X 2	60.7	66.0	6	12	2	1.2040	14
3 x 1	-	-	4	8	2	1.2360	10
3 X 1 1/2	58.0	71.0	4	8	2	1.2750	10
3 X 2	64.0	73.4	4	8	2	1.6248	13
3 X 2 1/2	71.9	75.9	4	8	2	1.9748	16
4 X 2	69.1	87.5	2	4	2	2.6270	11
4 X 2 1/2	77.2	89.1	1	2	2	2.5800	5
4 X 3	83.8	91.4	1	2	2	3.3780	7
6 x 4	102.0	125.0	-	1	1	7.7800	8

*** THE ACTUAL WEIGHT CAN VARY BY ± 3%**

YOUR TRUST OUR SUCCESS
BTS
BAO TIN STEEL
BAO TIN STEEL CO., LTD

MALLEABLE IRON PIPE FITTINGS CLASS 150 lbs.

REDUCING TEES

ART, BRT



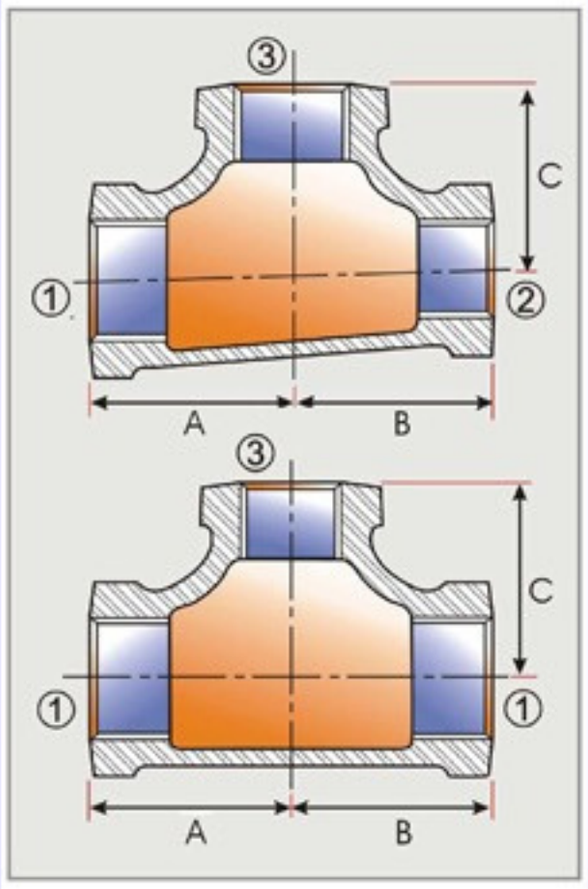



Size 1 x 2 x 3 (inch)	Dimensions A	B	C	Inner Box Pcs./Box	Master Ctn. Pcs./Ctn.	NO.of Inner Box	Weight/Pcs.	N.W./Ctn. (Kgs.)
1/4 X 1/8	18.8	18.8	19.3	25	300	12	0.0601	18
3/8 X 1/8	22.4	20.6	21.6	90	360	4	0.0730	26
3/8 X 1/4	22.4	22.4	22.9	60	240	4	0.0979	23
1/2 X 1/8	21.9	21.9	23.5	40	160	4	0.1080	17
1/2 X 1/4	24.6	24.6	24.9	40	160	4	0.1248	20
1/2 X 3/8	25.9	25.9	25.7	40	160	4	0.1350	22
3/4 X 1/8	24.0	24.0	25.7	32	128	4	0.1520	19
3/4 X 1/4	26.7	26.7	27.4	25	100	4	0.1746	17
3/4 X 3/8	27.9	27.9	28.1	25	100	4	0.1800	18
3/4 X 1/2	29.9	29.9	30.4	20	80	4	0.2239	18
1 X 1/4	27.6	27.6	30.4	20	80	4	0.2398	19
1 X 3/8	30.0	30.0	32.3	15	60	4	0.2730	16
1 X 1/2	31.4	31.4	34.8	15	60	4	0.3060	18
1 X 3/4	34.8	34.8	36.8	12	48	4	0.3484	17
1 1/4 X 1/4	30.0	30.0	36.6	20	40	2	0.3450	14
1 1/4 X 3/8	32.0	32.0	36.6	20	40	2	0.4009	16
1 1/4 X 1/2	34.0	34.0	38.9	20	40	2	0.4206	17
1 1/4 X 3/4	36.8	36.8	41.2	20	40	2	0.4719	19
1 1/4 X 1	40.1	40.1	42.2	20	40	2	0.5369	21
1 1/2 X 3/8	40.1	40.1	40.2	18	36	2	0.4450	16
1 1/2 X 1/2	35.8	35.8	42.2	18	36	2	0.4840	17
1 1/2 X 3/4	35.8	35.8	44.5	15	30	2	0.5320	16
1 1/2 X 1	41.9	41.9	45.7	10	30	3	0.6168	19
1 1/2 X 11/4	41.9	41.9	47.8	12	24	2	0.6906	17
2 X 3/8	46.2	46.2	-	10	20	2	0.6600	13
2 X 1/2	37.9	37.9	47.8	10	20	2	0.6768	14
2 X 3/4	40.6	40.6	50.0	10	20	2	0.7980	16
2 X 1	43.9	43.9	51.3	10	20	2	0.8096	16
2 X 11/4	47.3	47.3	52.2	8	16	2	0.9056	14
2 X 11/2	50.3	50.3	53.8	8	16	2	1.0662	17
2 1/2 X 1/2	40.2	40.2	55.9	6	12	2	1.2800	3
2 1/2 X 3/4	44.2	44.2	58.9	6	12	2	1.2680	15
2 1/2 X 1	46.5	46.5	59.0	5	10	2	1.3776	14
2 1/2 X 1 1/4	47.5	47.5	62.2	5	10	2	1.4808	15
2 1/2 X 1 1/2	54.9	54.9	63.8	5	10	2	1.5068	15
2 1/2 X2	60.7	60.7	66.0	4	8	2	1.7044	14
3 X 1/2	46.5	46.5	65.0	4	8	2	1.7130	14
3 X 3/4	45.5	45.5	65.3	3	6	2	1.3280	8
3 X 1	50.8	50.8	67.6	3	6	2	1.9765	12
3 X 1 1/4	55.1	55.1	69.6	3	6	2	1.6976	10
3 X 1 1/2	58.2	58.2	71.1	3	6	2	2.1740	13
3 X 2	64.0	64.0	73.4	3	6	2	2.3873	14
3 X 2 1/2	71.9	71.9	76.0	3	6	2	2.7200	16
4 X 1/2	53.5	53.5	79.2	2	4	2	2.5000	10
4 X 3/4	53.5	53.5	79.2	2	4	2	2.7500	11
4 X 1	-	-	-	2	4	2	3.0466	12
4 X 1 1/4	61.0	61.0	86.5	2	4	2	3.1120	12
4 X 1 1/2	62.5	62.5	82.6	2	4	2	3.4200	14
4 X 2	68.2	68.2	84.9	-	3	1	3.6770	11
4 X 2 1/2	77.5	77.5	89.2	-	3	1	4.1900	13
4 X 3	82.1	82.1	89.6	1	2	2	4.1920	8
5 X 3	89.2	89.2	107.2	1	2	2	5.1000	10
5 X 4	100.0	100.0	111.0	-	1	1	6.1000	6
6 X 1/2	-	86.1	-	-	1	1	5.8000	6
6 X 2	78.2	78.2	115.8	-	1	1	7.0000	7
6 X 2 1/2	86.1	86.1	118.4	-	1	1	7.3500	7
6 X 3	92.5	92.5	120.7	-	1	1	8.5880	9
6 X 4	104.9	104.9	125.5	-	1	1	8.8852	9
6 X 5	116.0	116.0	128.0	-	1	1	10.5000	11
1/2 X 1/4 X 1/2	28.4	24.9	28.4	30	120	4	0.1430	17
1/2 X 1/2 X 3/4	31.0	31.0	30.5	30	120	4	0.1973	24
1/2 X 1/2 X 1	34.6	34.6	32.0	25	100	4	0.2422	24
3/4 X 1/2 X 1/2	29.9	27.9	30.4	25	100	4	0.1820	18
3/4 X 1/2 X 3/4	32.6	30.4	32.6	20	80	4	0.2224	18
3/4 X 1/2 X 1	36.1	34.8	34.1	18	72	4	0.2900	21
3/4 X 3/4 X 1	36.8	36.8	34.8	40	80	2	0.2956	24
3/4 X 3/4 X 1 1/4	41.1	41.1	36.8	20	60	3	0.3520	21
3/4 X 3/4 X 1 1/2	42.1	42.1	37.9	12	36	3	0.4050	15
1 X 1/2 X 1/2	31.4	27.9	34.8	20	80	4	0.2282	18
1 X 1/2 X 3/4	34.1	30.4	36.1	20	80	4	0.2972	24
1 X 1/2 X 1	37.3	34.8	37.3	15	60	4	0.3324	20
1 X 3/4 X 1/2	31.4	29.9	34.8	20	80	4	0.2848	23
1 X 3/4 X 3/4	34.1	32.6	36.1	15	60	4	0.2742	16
1 X 3/4 X 1	38.1	36.8	38.1	30	60	2	0.3748	22
1 X 1 X 1 1/4	42.4	42.4	40.1	11	44	4	0.4150	18
1 X 1 X 1 1/2	45.7	45.7	41.9	9	36	4	0.5230	19
1 X 1 X 2	50.3	50.3	47.9	12	24	2	0.6420	15
1 1/4 X 1/2 X 1/2	34.0	32.0	38.9	25	50	2	0.3048	15
1 1/4 X 1/2 X 3/4	37.0	32.0	39.5	25	50	2	0.3600	18
1 1/4 X 1/2 X 1	40.1	34.5	42.4	20	40	2	0.4010	16
1 1/4 X 1/2 X 1 1/4	43.6	38.1	43.6	20	40	2	0.4976	20
1 1/4 X 3/4 X 1/2	36.1	32.6	40.3	10	40	4	0.3418	14
1 1/4 X 3/4 X 3/4	36.1	32.6	40.4	10	40	4	0.4086	16
1 1/4 X 3/4 X 1	39.3	36.1	41.5	10	40	4	0.4420	18
1 1/4 X 3/4 X 1 1/4	44.5	41.2	44.5	20	40	2	0.4992	20
1 1/4 X 1 X 1/2	33.3	31.4	38.1	20	40	2	0.3564	14

YOUR TRUST OUR SUCCESS
BTS
BAO TIN STEEL
BAO TIN STEEL CO., LTD

MALLEABLE IRON PIPE FITTINGS CLASS 150 lbs.

REDUCING TEES

ART, BRT

Siz 1X2X3 (inch)	Dimensions A	B	C	Inner Box Pcs./Box	Master Ctn. Pcs./Ctn.	NO.of Inner Box	Weight/Pcs.	N.W./Ctn. (Kgs.)
1 1/4 X 1X 3/4	36.1	34.1	40.4	20	40	2	0.3866	15
1 1/4 X 1 X 1	39.3	37.3	41.5	20	40	2	0.4706	19
1 1/4 X 1 X 1 1/4	44.5	42.4	44.5	15	30	2	0.5440	16
1 1/4 X 1 X 1 1/2	49.3	42.4	49.3	18	36	2	0.5172	19
1 1/4 X1 1/4 X 1 1/2	47.8	47.8	46.2	12	24	2	0.6270	15
1 1/4 X1 1/4 X 2	53.3	53.3	48.3	12	24	2	0.7788	19
1 1/2 X 1/2 X 3/4	36.5	28.5	42.6	12	48	4	0.3250	16
1 1/2 X 1/2 X 1	-41.9	38.6	49.3	18	36	2	0.5400	19
1 1/2 X 1/2 X 1 1/4	48.0	43.5	50.0	15	30	2	0.6540	20
1 1/2 X 1/2 X 1 1/2	49.3	42.2	49.3	12	24	2	0.6193	15
1 1/2 X 3/4 X 1/2	35.5	29.5	42.5	15	30	2	0.4108	12
1 1/2 X 3/4 X 3/4	38.3	32.3	41.6	15	30	2	0.3746	11
1 1/2 X 3/4 X 1 1/4	45.5	40.0	49.0	12	24	2	0.6428	15
1 1/2 X 3/4 X 1 1/2	48.3	43.6	48.3	12	24	2	0.5840	14
1 1/2 X 1 X 1/2	-	-	-	15	30	2	0.4000	12
1 1/2 X 1 X 3/4	37.8	34.2	44.0	15	30	2	0.5125	15
1 1/2 X 1 X 1	41.9	38.1	45.7	15	30	2	0.5050	15
1 1/2 X 1 X 1 1/4	46.2	42.4	47.8	12	24	2	0.5600	13
1 1/2 X 1 X 1 1/2	49.3	45.7	49.3	12	24	2	0.6328	15
1 1/2 X 1 1/4 X 1/2	35.8	34.0	42.2	12	24	2	0.4530	11
1 1/2 X 1 1/4 X 3/4	38.6	36.3	44.5	12	24	2	0.5100	12
1 1/2 X 1 1/4 X 1	41.1	39.3	44.8	12	24	2	0.5852	14
1 1/2 X 1 1/4 X 1 1/4	46.2	44.5	47.8	12	24	2	0.7320	18
1 1/2 X 1 1/4 X 1 1/2	48.3	46.8	48.3	12	24	2	0.7047	17
1 1/2 X 1 1/4 X 2	55.5	51.5	53.4	8	16	2	0.8500	14
1 1/2 X 1 1/2 X 2	53.8	53.8	50.3	8	16	2	0.8788	14
2 X 1/2 X 2	56.1	46.8	56.1	8	16	2	0.8908	14
2 X 3/4 X 3/4	41.5	33.0	49.0	12	24	2	0.5334	13
2 X 3/4 X 2	57.2	50.0	57.2	8	16	2	0.9928	16
2 X 1 X 1	44.0	40.0	53.0	12	24	2	0.6740	16
2 X 1 X 1 1/2	50.3	44.8	53.8	10	20	2	0.7960	16
2 X 1 X 2	56.1	50.3	56.1	8	16	2	0.9628	15
2 X 1 1/4 X 1	46.0	40.0	51.5	8	16	2	0.7498	12
2 X 1 1/4 X 1 1/4	47.3	43.6	52.2	8	16	2	0.8940	14
2 X 1 1/4 X 1 1/2	53.1	47.8	54.9	8	16	2	0.7760	12
2 X 1 1/4 X 2	57.2	53.3	57.2	8	16	2	1.0000	16
2 X 1 1/2 X 1/2	48.3	38.9	48.5	10	20	2	0.7400	15
2 X 1 1/2 X 3/4	41.5	37.1	50.3	10	20	2	0.7200	14
2 X 1 1/2 X 1	43.9	41.9	51.3	10	20	2	0.8028	16
2 X 1 1/2 X 1 1/4	47.3	45.3	52.2	8	16	2	0.7600	12
2 X 1 1/2 X 1 1/2	50.3	48.3	53.8	8	16	2	0.8152	13
2 X 1 1/2 X 2	56.1	53.7	56.1	8	16	2	1.0292	16
2 X 2 X 2 1/2	64.7	64.7	59.5	6	12	2	1.4800	18
2 1/2 X 2 X 2	59.5	56.0	64.7	5	10	2	1.4870	15
2 1/2 X 2 X 2 1/2	68.6	66.0	68.6	4	8	2	1.8502	15

*** THE ACTUAL WEIGHT CAN VARY BY ± 3%**

REDUCING NIPPLES

RNI

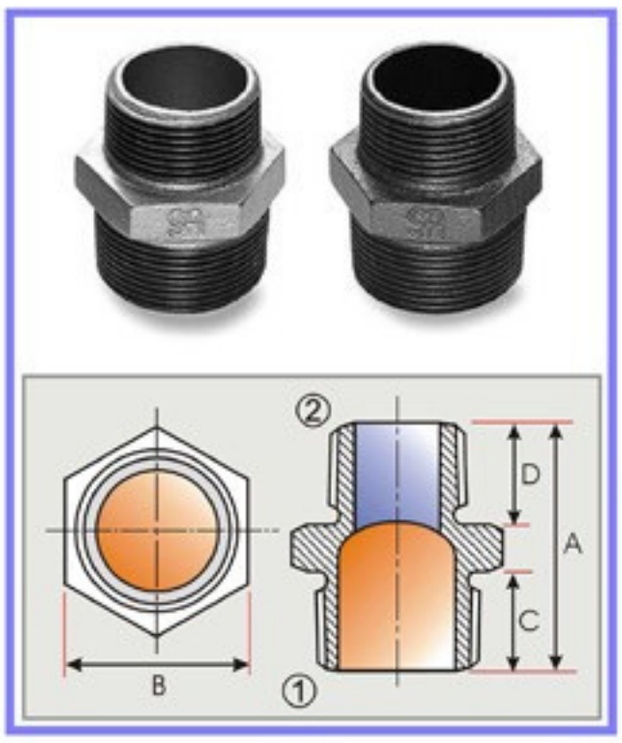

Size (inch)	Dimensions A	B	C	D	Inner Box Pcs./Box	Master Ctn. Pcs./Ctn.	NO.of Inner Box	Weight/Pcs.	N.W./Ctn. (Kgs.)
3/8 X 1/4	38.0	19.0	15.0	14.0	105	210	2	0.0450	9
1/2 X 1/4	44.0	22.0	19.0	16.0	90	180	2	0.0650	12
1/2 X 3/8	44.0	22.0	19.0	16.0	170	340	2	0.0710	24
3/4 X 1/2	47.0	30.0	20.5	17.5	50	200	4	0.0860	17
1 X 1/2	53.0	36.0	24.5	18.5	50	150	3	0.1530	23
1 X 3/4	53.0	36.0	22.5	20.5	45	135	3	0.1320	18
1 1/4 X 1/2					40	80	2	0.2170	17
1 1/4 X 3/4	57.0	46.0	26.0	21.0	40	80	2	0.2000	16
1 1/4 X 1	57.0	46.0	25.0	22.0	40	80	2	0.2220	18
1 1/2 X 1/2					30	60	2	0.2960	18
1 1/2 X 3/4	59.0	50.0	26.0	21.0	30	60	2	0.3230	19
1 1/2 X 1	59.0	50.0	25.0	22.0	25	50	2	0.3028	15
1 1/2 X 1 1/4	59.0	50.0	25.0	22.0	25	50	2	0.3138	16
2 X 1/2	68.0	65.0	33.0	21.0	25	50	2	0.4100	21
2 X 3/4	68.0	65.0	32.0	22.0	25	50	2	0.4100	21
2 X 1	68.0	65.0	30.0	24.0	25	50	2	0.4250	21
2 X 1 1/4	68.0	65.0	30.0	24.0	20	40	2	0.4216	17
2 X1 1/2	68.0	65.0	30.0	24.0	18	36	2	0.4490	16
2 1/2 X 1	75.0	80.0	35.0	24.0	10	20	2	0.8000	16
2 1/2 X 1 1/4	75.0	80.0	33.0	26.0	10	20	2	0.5600	11
2 1/2 X 1 1/2	75.0	80.0	33.0	26.0	10	20	2	0.9000	18
2 1/2 X 2	75.0	80.0	31.0	28.0	16	32	2	0.7200	23
3 X 1 1/2	83.0	95.0	39.0	28.0	6	12	2	1.2000	14
3 X 2	83.0	95.0	37.0	30.0	6	12	2	1.0682	13
3 X 2 1/2	83.0	95.0	35.0	32.0	6	12	2	1.0200	12
4 X 2	95.0	130.0	47.0	31.0	4	8	2	2.1400	17
4 X 2 1/2	-	-	-	-	4	8	2	2.0200	16
4 X 3	95.0	130.0	42.0	36.0	4	8	2	1.8848	15

*** THE ACTUAL WEIGHT CAN VARY BY ± 3%**

YOUR TRUST OUR SUCCESS
BTS
BAO TIN STEEL
BAO TIN STEEL CO., LTD

MALLEABLE IRON PIPE FITTINGS CLASS 150 lbs.

Size (inch) 1 X 2	Dimensions A	Inner Box Pcs./Box	Master Ctn. Pcs./Ctn.	NO.of Inner Box	Weight/Pcs.	N.W./Ctn. (Kgs.)
1/4 X 1/8	25.4	50	600	12	0.0337	20
3/8 X 1/8	28.7	35	420	12	0.0458	19
3/8 X 1/4	28.7	30	360	12	0.0478	17
1/2 X 1/8	31.8	75	300	4	0.0713	21
1/2 X 1/4	31.2	75	300	4	0.0736	22
1/2 X 3/8	31.2	60	240	4	0.0741	18
3/4 X 1/8	36.6	70	210	3	0.0910	19
3/4 X 1/4	36.6	45	180	4	0.1050	19
3/4 X 3/8	35.9	45	180	4	0.0956	17
3/4 X 1/2	35.9	60	180	3	0.1194	21
1 X 1/4	42.0	45	135	3	0.1438	19
1 X 3/8	42.0	30	120	4	0.1560	19
1 X 1/2	42.0	30	120	4	0.1794	22
1X 3/4	42.0	25	100	4	0.1848	18
1 1/4 X 3/8	52.3	25	75	3	0.2250	17
1 1/4 X 1/2	52.3	25	75	3	0.2374	18
1 1/4 X 3/4	52.3	25	75	3	0.2618	20
1 1/4 X 1	52.3	15	60	4	0.3014	18
1 1/2 X 3/8	58.7	30	60	2	0.2670	16
1 1/2 X 1/2	57.5	20	60	3	0.3014	18
1 1/2 X 3/4	57.5	15	60	4	0.3226	19
1 1/2 X 1	57.5	25	50	2	0.4506	23
1 1/2 X 1 1/4	57.5	12	48	4	0.4034	19
2 X 3/8	71.4	12	36	3	0.4400	16
2 X 1/2	70.0	12	36	3	0.4516	16
2 X 3/4	70.0	12	36	3	0.4576	16
2 X 1	70.0	12	36	3	0.4798	17
2 X 1 1/4	70.0	9	27	3	0.4952	13
2 X 1 1/2	70.0	9	27	3	0.6271	17
2 1/2 X 1/2	82.6	10	20	2	0.7780	16
2 1/2 X 3/4	80.9	10	20	2	0.8864	18
2 1/2 X 1	80.9	10	20	2	0.7954	16
2 1/2 X 1 1/4	82.6	10	20	2	0.8336	17
2 1/2 X 1 1/2	82.6	7	14	2	1.0136	14
2 1/2 X 2	82.6	7	14	2	1.0880	15
3 X 1/2	91.8	7	14	2	1.3100	18
3 X 3/4	91.8	7	14	2	1.3133	18
3 X 1	91.8	6	12	2	1.4100	17
3 X 1 1/4	91.8	6	12	2	1.3476	16
3 X 1 1/2	91.8	6	12	2	1.3547	16
3 X 2	93.7	6	12	2	1.4707	18
3 X 2 1/2	93.7	5	10	2	1.6520	17
4 X 1/2	109.1	3	6	2	1.7000	10
4 X 3/4	109.1	3	6	2	1.7000	10
4 X 1	111.3	3	6	2	2.3800	14
4 X 1 1/4	111.3	3	6	2	1.6600	10
4 X 1 1/2	111.3	3	6	2	1.7400	10
4 X 2	111.3	3	6	2	2.4833	15
4 X 2 1/2	111.3	3	6	2	2.4960	15
4 X 3	111.3	3	6	2	2.5880	16
5 X 2	129.0	-	4	1	2.9000	12
5 X 3	129.0	-	2	1	3.1000	6
5 X 4	129.0	-	2	1	4.8470	10
6 X 2	147.5	-	2	1	4.0000	8
6 X 2 1/2	147.5	-	2	1	4.4500	9
6 X 3	147.5	-	2	1	6.2100	12
6 X 4	147.5	1	2	2	6.6680	13
6 X 5	147.5	1	2	2	4.5000	9

REDUCING COUPLINGS

ARS, BRS



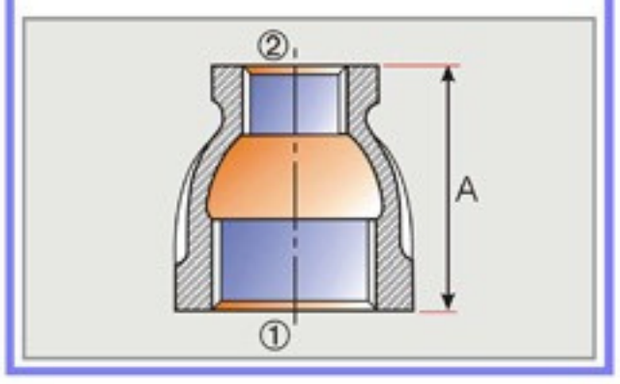

*** THE ACTUAL WEIGHT CAN VARY BY ± 3%**

YOUR TRUST OUR SUCCESS
BTS
BAO TIN STEEL
BAO TIN STEEL CO., LTD

MALLEABLE IRON PIPE FITTINGS CLASS 150 lbs.

BUSHINGS

ABU, BU



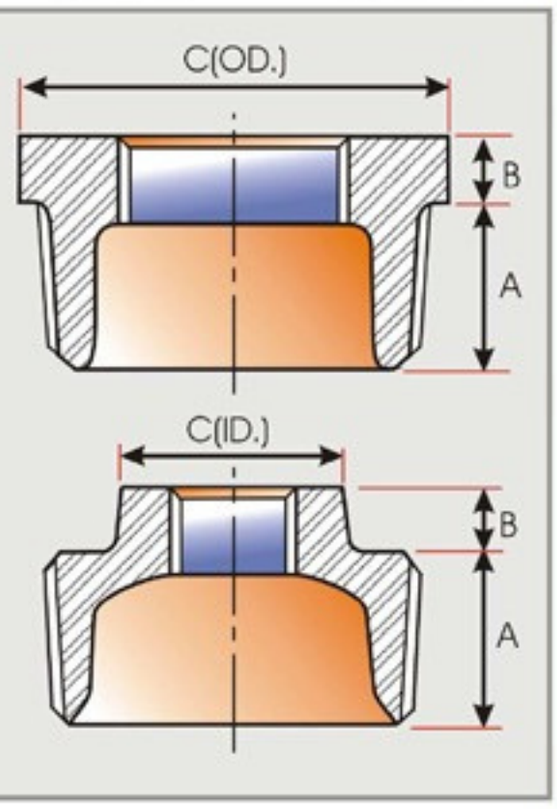



Size (inch)	Dimensions A	B	C(id)	C(od)	Inner Box Pcs./Box	Master Ctn. Pcs./Ctn.	NO.of Inner Box	Weight/Pcs.	N.W./Ctn. (Kgs.)
1/4 X 1/8	13.2	3.8	-	16.3	120	1440	12	0.0130	19
3/8 X 1/8	12.2	4.1	-	21.6	75	900	12	0.0250	23
3/8 X 1/4	12.2	4.1	-	21.1	75	900	12	0.0201	18
1/2 X 1/8	16.4	4.8	-	26.2	150	600	4	0.0492	30
1/2 X 1/4	14.2	4.8	-	26.2	150	600	4	0.0425	26
1/2 X 3/8	14.2	4.8	-	26.2	150	600	4	0.0352	21
3/4 X 1/8	16.0	5.6	-	29.2	75	300	4	0.0758	23
3/4 X 1/4	16.0	5.6	-	29.2	75	300	4	0.0616	18
3/4 X 3/8	16.0	5.6	-	29.2	75	300	4	0.0524	16
3/4 X 1/2	18.0	5.6	-	29.2	75	300	4	0.0500	15
1 X 1/8	19.1	9.6	28.5	-	50	200	4	0.0938	19
1 X 1/4	19.1	9.6	28.5	-	50	200	4	0.0910	18
1 X 3/8	19.1	9.6	28.5	-	50	200	4	0.0862	17
1 X 1/2	21.6	6.4	-	36.1	50	200	4	0.1044	21
1 X 3/4	21.6	6.4	-	36.1	50	200	4	0.0844	17
1 1/4 X 1/4	22.8	8.6	28.5	-	30	120	4	0.1338	16
1 1/4 X 3/8	22.8	8.6	28.5	-	30	120	4	0.1200	14
1 1/4 X 1/2	22.8	8.6	31.5	-	30	120	4	0.1474	18
1 1/4 X 3/4	20.3	7.1	-	44.7	30	120	4	0.1864	22
1 1/4 X 1	20.3	7.1		44.7	30	120	4	0.1350	16
1 1/2 X 1/8	21.1	9.4	28.4	-	25	75	3	0.2950	22
1 1/2 X 1/4	23.6	9.4	28.5	-	25	75	3	0.1790	13
1 1/2 X 3/8	23.6	9.4	28.5	-	25	75	3	0.1740	13
1 1/2 X 1/2	23.6	9.4	34.0	-	25	75	3	0.1936	15
1 1/2 X 3/4	23.6	9.4	36.5	-	25	75	3	0.1892	14
1 1/2 X 1	23.3	7.9	-	50.8	25	75	3	0.2160	16
1 1/2 X 1 1/4	23.3	7.9	-	50.8	25	75	3	0.1471	11
2 X1/4	21.8	10.6	28.5	-	20	60	3	0.2732	16
2 X 3/8	22.4	10.0	28.5	-	20	60	3	0.2784	26
2 X 1/2	24.9	10.4	34.0	-	20	60	3	0.2832	17
2 X 3/4	24.9	10.4	41.4	-	20	60	3	0.3150	19
2 X 1	24.9	10.4	45.0	-	20	60	3	0.3080	18
2 X 1 1/4	27.0	11.0	-	63.0	20	60	3	0.3840	23
2 X 1 1/2	27.0	11.0	-	63.0	20	60	3	0.3155	19
2 1/2 X 1/2	27.2	11.2	34.0	-	15	30	2	0.7130	21
2 1/2 X 3/4	27.2	11.2	41.4	-	15	30	2	0.4328	13
2 1/2 X 1	27.2	11.2	49.5	-	15	30	2	0.4576	14
2 1/2 X 1 1/4	27.2	11.2	60.7	-	15	30	2	0.4973	15
2 1/2 X 1 1/2	27.2	11.2	-	75.7	15	30	2	0.6208	19
2 1/2 X 2	29.7	9.4	-	75.7	15	30	2	0.4460	13
3 X 1/2	28.7	12.2	34.0	-	12	24	2	1.0100	24
3 X 3/4	28.7	12.2	41.4	-	12	24	2	0.6180	15
3 X 1	28.7	12.2	49.5	-	12	24	2	0.6536	16
3 X 1 1/4	28.7	12.2	60.7	-	12	24	2	0.7950	19
3 X 1 1/2	28.7	12.2	68.1	-	12	24	2	0.7576	18
3 X 2	28.7	12.2	-	98.0	12	24	2	0.9220	22
3 X 2 1/2	28.7	12.2	-	98.0	12	24	2	0.8360	20
3 1/2 X 1 1/2	30.0	13.2	70.0	-	8	16	2	1.0000	16
3 1/2 X 2	33.0	13.2	83.3	-	8	16	2	1.1500	18
3 1/2 X 3	30.0	10.9	-	117.3	8	16	2	0.8488	14
4 X 1/2	39.8	14.2	-	121.0	5	10	2	1.6600	17
4 X 3/4	38.0	13.0	-	121.0	5	10	2	1.4650	15
4 X 1	31.0	15.2	-	-	5	10	2	1.1620	12
4 X 1 1/4	31.0	15.2	60.7	-	5	10	2	1.3712	14
4 X 1 1/2	31.0	15.2	68.1	-	5	10	2	1.0866	11
4 X 2	36.0	15.2	83.3	-	5	10	2	1.3592	14
4 X 2 1/2	31.0	15.2	98.0	-	5	10	2	1.5376	15
4 X 3	37.0	14.0	-	126.0	5	10	2	1.6804	17
5 X 2	33.3	15.2	83.3	-	2	4	2	2.8800	12
5 X 3	42.5	15.5	117.3	-	2	4	2	2.3390	9
5 X 4	41.7	15.5	-	146.8	2	4	2	2.2326	9
6 X 2	35.6	19.1	83.3	-	2	4	2	4.2900	17
6 X 2 1/2	35.6	19.1	98.0	-	2	4	2	3.8770	16
6 X 3	35.6	19.1	117.3	-	2	4	2	2.7400	11
6 X 4	40.0	19.1	147.1	-	2	4	2	3.2220	13
6 X 5	35.6	19.1	-	179.1	2	4	2	3.1260	13

*** THE ACTUAL WEIGHT CAN VARY BY ± 3%**

YOUR TRUST OUR SUCCESS
BTS
BAO TIN STEEL
BAO TIN STEEL CO., LTD

MALLEABLE IRON PIPE FITTINGS CLASS 300 lbs.

ELBOWS 90°

AXHL 90, BXHL 90

Size (inch)	Dimensions A	Inner Box Pcs./Box	Master Ctn. Pcs./Ctn.	NO.of Inner Box	Weight/Pcs.	N.W./Ctn. (Kgs.)
1/4	23.9	180	360	2	0.0946	34
3/8	26.9	120	240	2	0.1376	33
1/2	31.7	40	80	2	0.2140	17
3/4	36.6	30	60	2	0.3413	20
1	41.4	20	40	2	0.5200	21
1 1/4	49.3	12	24	2	0.8450	20
1 1/2	54.1	8	16	2	1.1000	18
2	63.5	6	12	2	1.8016	22
2 1/2	74.7	4	8	2	2.8230	23
3	85.8	2	4	2	4.3450	17
4	105.0	1	2	2	6.7200	13



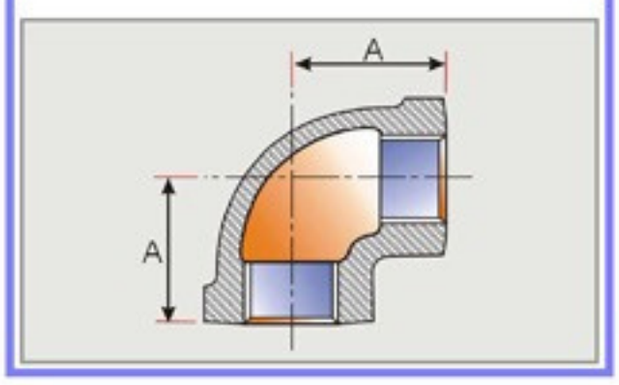

*** THE ACTUAL WEIGHT CAN VARY BY ± 3%**

ELBOWS 45°

AXHL 45, BXHL 45

Size (inch)	Dimensions A	Inner Box Pcs./Box	Master Ctn. Pcs./Ctn.	NO.of Inner Box	Weight/Pcs.	N.W./Ctn. (Kgs.)
1/4	20.6	180	360	2	0.0880	32
3/8	22.3	120	240	2	0.1300	31
1/2	25.4	40	80	2	0.1941	16
3/4	28.7	30	60	2	0.3096	19
1	33.3	20	40	2	0.4786	19
1 1/4	38.1	12	24	2	0.7584	18
1 1/2	42.9	8	16	2	0.9860	16
2	50.8	6	12	2	1.6416	20
2 1/2	57.1	4	8	2	2.5570	20
3	63.5	2	4	2	3.9724	16
4	71.0	1	2	2	5.6800	11

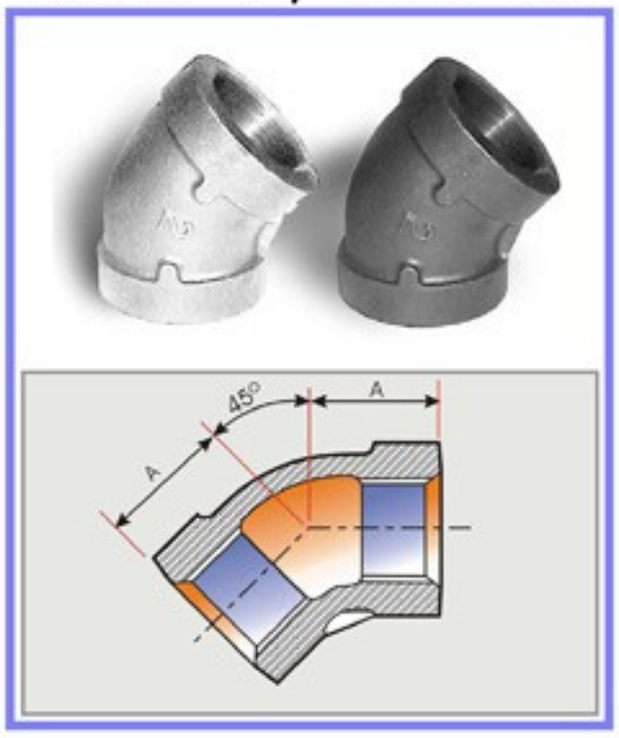

*** THE ACTUAL WEIGHT CAN VARY BY ± 3%**

STREET ELBOWS 90°

AXHSL 90, BXHSL 90

Size (inch)	Dimensions A	Dimensions B	Inner Box Pcs./Box	Master Ctn. Pcs./Ctn.	NO.of Inner Box	Weight/Pcs.	N.W./Ctn. (Kgs.)
1/4	36.6	23.9	180	360	2	0.0696	25
3/8	41.4	26.9	120	240	2	0.1162	28
1/2	50.8	31.7	40	80	2	0.1820	15
3/4	55.6	36.6	30	60	2	0.2858	17
1	65.0	41.4	20	40	2	0.4660	19
1 1/4	73.1	49.3	12	24	2	0.7638	18
1 1/2	79.5	54.1	8	16	2	1.0020	16
2	93.7	63.5	6	12	2	1.6500	20
4	148.0	105.0	1	2	2	6.3800	12

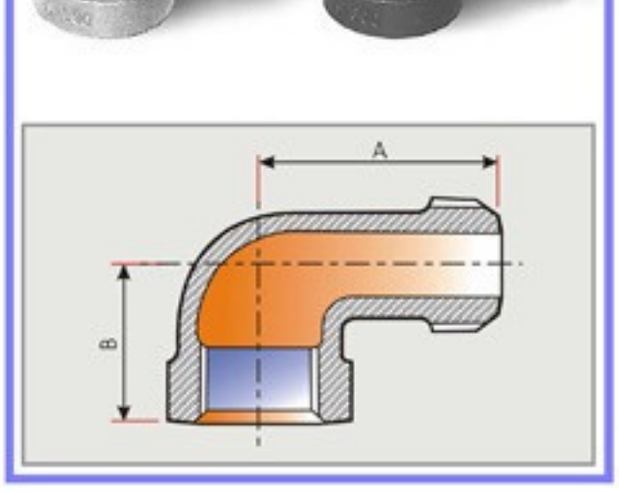

*** THE ACTUAL WEIGHT CAN VARY BY ± 3%**

YOUR TRUST OUR SUCCESS
BTS
BAO TIN STEEL
BAO TIN STEEL CO., LTD

MALLEABLE IRON PIPE FITTINGS CLASS 300 lbs.

TEES

AXHT, BXHT



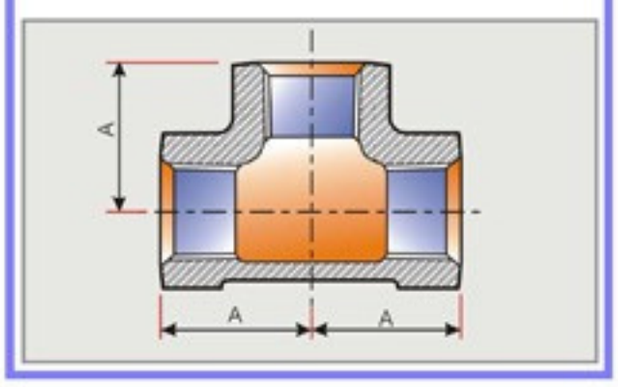

Size (inch)	Dimensions A	Inner Box Pcs./Box	Master Ctn. Pcs./Ctn.	NO.of Inner Box	Weight/Pcs	N.W./Ctn. (Kgs.)
1/4	23.9	120	240	2	0.1332	32
3/8	26.9	90	180	2	0.1941	35
1/2	31.7	30	60	2	0.3066	18
3/4	36.6	20	40	2	0.4887	20
1	41.4	12	24	2	0.7101	17
1 1/4	49.3	10	20	2	1.1340	23
1 1/2	54.1	6	12	2	1.5140	18
2	63.5	4	8	2	2.3675	19
2 1/2	74.7	2	4	2	3.9300	16
3	85.8	1	2	2	5.8400	12
4	105.0	1	2	2	9.3580	17

*** THE ACTUAL WEIGHT CAN VARY BY ± 3%**

COUPLINGS

AXHS, BXHS



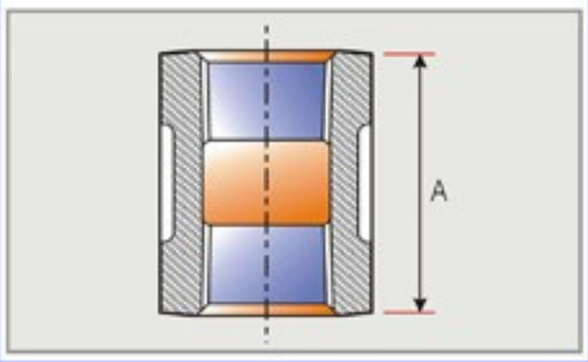

Size (inch)	Dimensions A	Inner Box Pcs./Box	Master Ctn. Pcs./Ctn.	NO.of Inner Box	Weight/Pcs.	N.W./Ctn. (Kgs.)
1/4	34.8	200	400	2	0.0762	30
3/8	41.1	150	300	2	0.1196	36
1/2	47.5	40	80	2	0.1891	15
3/4	53.8	30	60	2	0.2958	18
1	60.2	20	40	2	0.4580	18
1 1/4	72.9	12	24	2	0.7628	18
1 1/2	72.9	12	24	2	0.9210	22
2	91.9	6	12	2	1.5833	19
2 1/2	104.6	4	8	2	2.4850	20
3	104.6	2	4	2	3.4398	14
4	108.0	2	4	2	4.7000	19

*** THE ACTUAL WEIGHT CAN VARY BY ± 3%**

REDUCING COUPLING

AXHRS, BXHRS



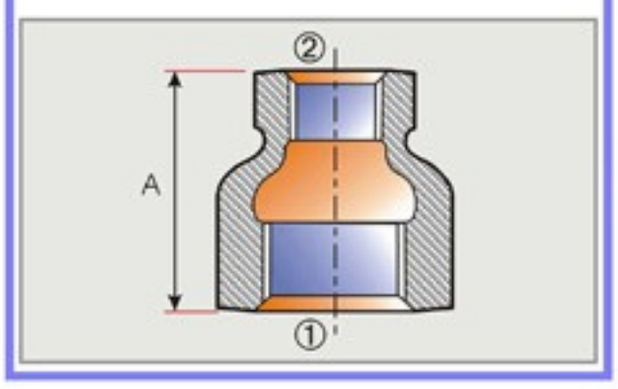

Size (inch)	Dimensions A	Inner Box Pcs./Box	Master Ctn. Pcs./Ctn.	NO.of Inner Box	Weight/Pcs.	N.W./Ctn. (Kgs.)
3/8 x 1/4	-	120	240	2	0.0940	23
1/2 x 1/4	42.9	100	200	2	0.1420	28
1/2 x 3/8	42.9	100	200	2	0.1556	31
3/4 x 3/8	44.5	60	120	2	0.2080	25
3/4 x 1/2	44.5	60	120	2	0.2270	27
1 x 1/2	50.8	50	100	2	0.3237	32
1 x 3/4	50.8	40	80	2	0.3586	29
1 1/4 x 1/2	60.5	24	48	2	0.5040	24
1 1/4 x 3/4	60.5	20	40	2	0.5400	22
1 1/4 x 1	60.5	20	40	2	0.5714	23
1 1/2 x 1/2	68.3	24	48	2	0.6532	31
1 1/2 x 3/4	68.3	20	40	2	0.6970	28
1 1/2 x 1	68.3	18	36	2	0.7364	27
1 1/2 x 1 1/4	68.3	18	36	2	0.8200	30
2 x 1/2	81.0	12	24	2	1.0776	26
2 x 3/4	81.0	12	24	2	1.0696	26
2 x 1	81.0	12	24	2	1.1016	26
2 X 1 1/4	81.0	8	16	2	1.2100	19
2 X 1 1/2	81.0	8	16	2	1.2475	20
2 1/2 x 1 1/2	93.7	4	8	2	1.8133	14
2 1/2 x 2	93.7	6	12	2	1.9850	24
3x2	103.1	4	8	2	2.8175	23
3x2 1/2	103.1	4	8	2	3.0080	24
4x3	112.0	2	4	2	4.0820	16

*** THE ACTUAL WEIGHT CAN VARY BY ± 3%**

YOUR TRUST OUR SUCCESS
BTS
BAO TIN STEEL
BAO TIN STEEL CO., LTD

MALLEABLE IRON PIPE FITTINGS CLASS 300 lbs.

CAPS

AXHCA, BXHCA

Size (inch)	Dimensions A	Inner Box Pcs./Box	Master Ctn. Pcs./Ctn.	NO.of Inner Box	Weight/Pcs.	N.W./Ctn. (Kgs.)
3/8	21.1	120	240	2	0.0620	15
1/2	24.9	80	160	2	0.0994	16
3/4	27.4	50	100	2	0.1524	15
1	32.0	30	60	2	0.2450	15
1 1/4	35.0	20	40	2	0.3992	16
1 1/2	36.3	15	30	2	0.5014	15
2	42.7	10	20	2	0.8420	17
2 1/2	56.0	8	16	2	1.3260	21
3	60.0	5	10	2	2.1080	20
4	70.0	3	6	2	3.1370	19



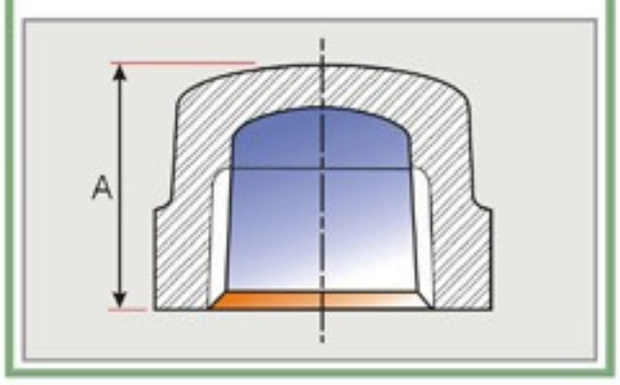

*** THE ACTUAL WEIGHT CAN VARY BY ± 3%**

UNION CONICAL BRASS SEAT

AXHCU, BXHCU

Size (inch)	Dimensions A	B	C	Inner Box Pcs./Box	Master Ctn. Pcs./Ctn.	NO.of Inner Box	Weight/Pcs.	N.W./Ctn. (Kgs.)
1/8	18.0	16.0	18.0	200	400	2	0.1040	52
1/4	19.5	17.5	22.0	120	240	2	0.1464	35
3/8	22.5	19.0	24.2	90	180	2	0.2080	37
1/2	24.5	20.0	27.0	40	80	2	0.2760	22
3/4	27.5	21.0	29.0	30	60	2	0.3866	23
1	29.0	23.0	32.5	18	36	2	0.6474	23
1 1/4	33.0	26.0	38.0	12	24	2	0.9184	22
1 1/2	35.5	29.0	41.5	10	20	2	1.1435	23
2	42.0	32.0	45.0	6	12	2	1.8716	22
2 1/2	43.5	37.0	51.0	4	8	2	3.0150	24
3	55.5	43.0	58.0	3	6	2	4.8440	29
4	61.5	54.0	64.5	1	2	2	8.4500	17

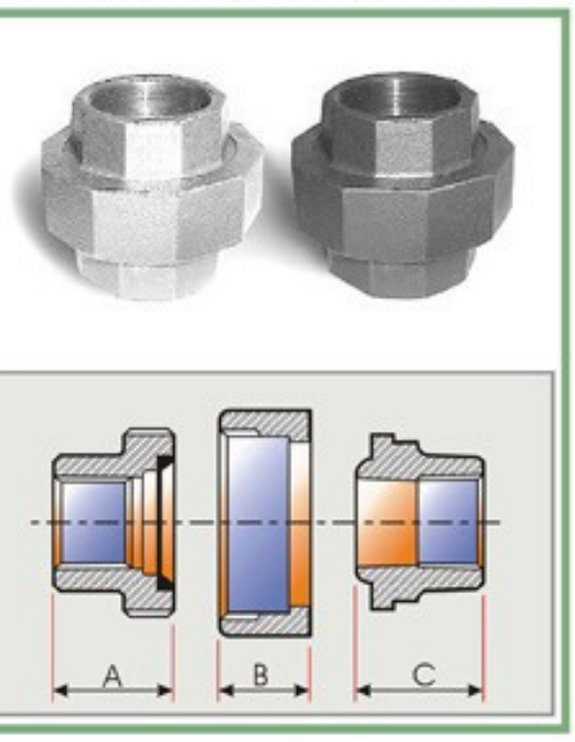

*** THE ACTUAL WEIGHT CAN VARY BY ± 3%**

REDUCING TEES

AXHRT, BXHRT

Size 1 x 2 x 3 (inch)	Dimensions A	B	C	Inner Box Pcs./Box	Master Ctn. Pcs./Ctn.	NO.of Inner Box	Weight/Pcs.	N.W./Ctn. (Kgs.)
3/4 x 3/4 x 1/2	33.3	33.3	35.0	30	60	2	0.4152	25
1 x 1 x 1/2	36.6	36.6	38.1	16	32	2	0.5746	18
1 x 1 x 3/4	38.1	38.1	39.6	15	30	2	0.6345	19
1 1/4 x 1 1/4 x 1/2	38.1	38.1	42.9	12	24	2	0.9170	22
1 1/4 x 1 1/4 x 3/4	41.4	41.4	44.4	12	24	2	0.9070	22
1 1/4 x 1 1/4 x 1	44.4	44.4	46.0	12	24	2	1.0100	24
1 1/2 x 1 1/2 x 1/2	41.4	41.4	46.0	10	20	2	1.0580	21
1 1/2 x 1 1/2 x 3/4	42.9	42.9	47.7	10	20	2	1.1130	22
1 1/2 x 1 1/2 x 1	46.0	46.0	50.8	10	20	2	1.2312	25
1 1/2 x 1 1/2 x 1 1/4	50.8	50.8	52.3	8	16	2	1.4088	23
2 x 2 x 1/2	44.4	44.4	52.3	6	12	2	1.6028	19
2 x 2 x 3/4	46.0	46.0	54.1	6	12	2	1.6380	20
2 x 2 x 1	50.8	50.8	57.1	5	10	2	1.7900	18
2 x 2 x 1 1/4	54.1	54.1	60.4	5	10	2	1.9600	20
2 x 2 x 1 1/2	57.1	57.1	58.7	5	10	2	2.1400	21
2 1/2 x 2 1/2 x 2	68.3	68.3	69.8	4	8	2	1.5060	12
3 x 3 x 2	71.4	71.4	79.5	2	4	2	4.3860	18

*** THE ACTUAL WEIGHT CAN VARY BY ± 3%**

YOUR TRUST OUR SUCCESS
BTS
BAO TIN STEEL
BAO TIN STEEL CO., LTD

Appendix A. Basic Dimension, for American Standard Pipe Threads

This information is selected from the International Standard for Pipe Threads, ANSI B1.20.1-1983 Table 2.

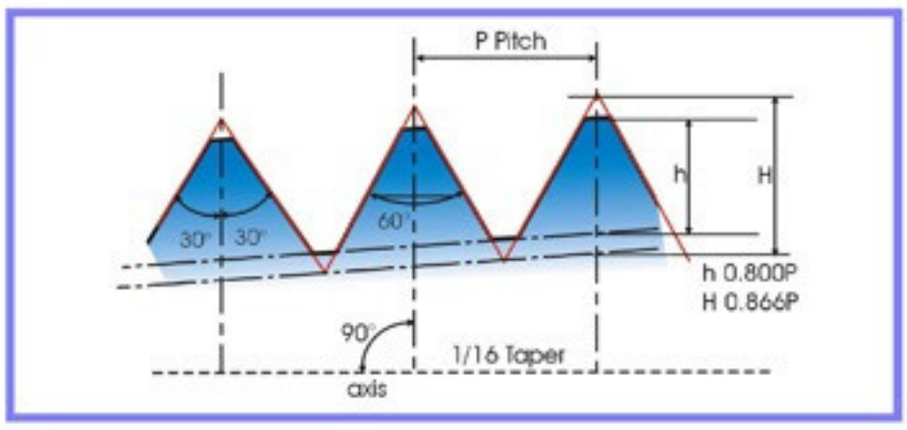

Fig. 4 (Taper)
H = 0.866025 P
h = 0.800000 P

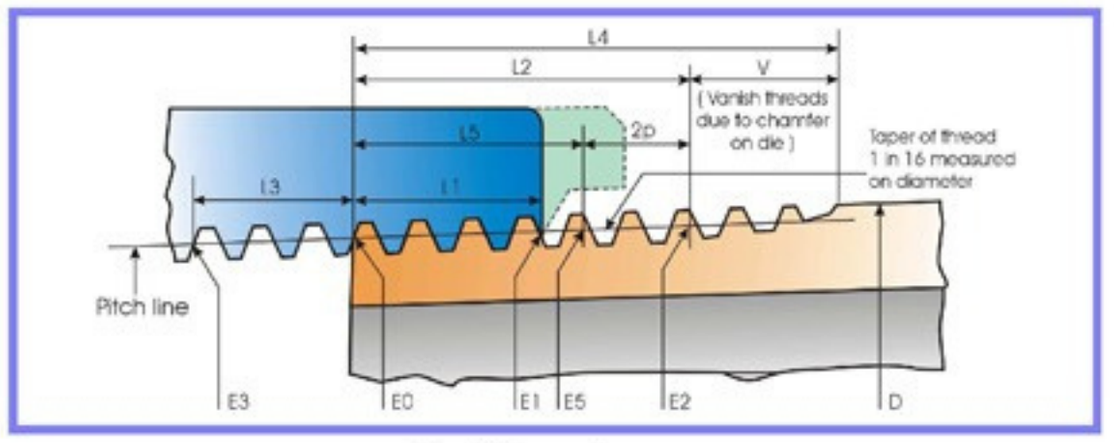

Fig. 5 (Taper)

Nominal Pipe Size (inchs)	O.D. of Pipe (D)	Threads /in. (N)	Pitch of Thread (P)	Pitch Dia. at Beginning of External Thread (E_0)	Handtight Engagement			Effective Thread. Extenal			Depth of Thread
					Length[2] (L_1)		Diam[3].	Length[4] (L_2)		Diam.	
					Inch	Thread	(E_1)	Inch	Thread	(E_2)	h
1/8	0.405	27.0	0.03704	0.36351	0.1615	4.36	0.37360	0.2639	7.12	0.38000	0.029
1/4	0.540	18.0	0.05556	0.47739	0.2278	4.10	0.49163	0.4018	7.23	0.50250	0.044
3/8	0.675	18.0	0.05556	0.61201	0.2400	4.32	0.62701	0.4078	7.34	0.63750	0.044
1/2	0.840	14.0	0.07143	0.75843	0.3200	4.48	0.77843	0.5337	7.47	0.79179	0.057
3/4	1.050	14.0	0.07143	0.96768	0.3390	4.75	0.98887	0.5457	7.64	1.00179	0.057
1	1.315	11.5	0.08696	1.21363	0.4000	4.60	1.23863	0.6828	7.85	1.25630	0.069
1 1/4	1.660	11.5	0.08696	1.55713	0.4200	4.83	1.58338	0.7068	8.13	1.60130	0.069
1 1/2	1.900	11.5	0.08696	1.79609	0.4200	4.83	1.82234	0.7235	8.32	1.84130	0.069
2	2.375	11.5	0.86996	2.26902	0.4360	5.01	2.29627	0.7565	8.70	2.31630	0.069
2 1/2	2.875	8.0	0.12500	2.71953	0.6820	5.46	2.76216	1.1375	9.10	2.79062	0.100
3	3.500	8.0	0.12500	3.34062	0.7660	6.13	3.38850	1.2000	9.60	3.41562	0.100
3 1/2	4.000	8.0	0.12500	3.83750	0.8210	6.57	3.88881	1.2500	10.00	3.91562	0.100
4	4.500	8.0	0.12500	4.33438	0.8440	6.75	4.38712	1.3000	10.40	4.41562	0.100
5	5.563	8.0	0.12500	5.39073	0.9370	7.50	5.44929	1.4063	11.25	5.47862	0.100
6	6.625	8.0	0.12500	6.44609	0.9580	7.66	6.50597	1.5125	12.10	6.54062	0.100

Nominal Pipe Size (inchs)	Length, L_1 Plane to L_2 Plane External Thread (L_2-L_1)		Wrench Makeup Length for Internal Thread[7]			Vanish Thread (V)		Overall[8] Length External Thread (L_4)	Nominal Complete External Threads[5]		Height of Thread (h)	Increase in Diam./ Thread (0.0625 /n)	Basic[6] Minor Diam. At Small End of Pipe (K_0)
			Length (L_3)		Diam. (E_3)				Length (L_5)	Diam. (E_5)			
	Inch	Thread	Inch	Thread		Inch	Thread						
1/8	0.1024	2.76	0.1111	3	0.35656	0.1285	3.47	0.3924	0.1898	0.37537	0.02963	0.00231	0.3339
1/4	0.1740	3.13	0.1667	3	0.46697	0.1928	3.47	0.5946	0.2907	0.49556	0.04444	0.00347	0.4329
3/8	0.1678	3.02	0.1667	3	0.60160	0.1928	3.47	0.6006	0.2967	0.63056	0.04444	0.00347	0.5676
1/2	0.2137	2.99	0.2143	3	0.74504	0.2478	3.47	0.7815	0.3909	0.78286	0.05714	0.00446	0.7013
3/4	0.2067	2.89	0.2143	3	0.95429	0.2478	3.47	0.7935	0.4029	0.99286	0.05714	0.00446	0.9105
1	0.2828	3.25	0.2609	3	1.19733	0.3017	3.47	0.9845	0.5089	1.24543	0.06957	0.00543	1.1441
11/4	0.2868	3.30	0.2609	3	1.54083	0.3017	3.47	1.0085	0.5329	1.59043	0.06957	0.00543	1.4876
11/2	0.3035	3.49	0.2609	3	1.77978	0.3017	3.47	1.0252	0.5496	1.83043	0.06957	0.00543	1.7265
2	0.3205	3.69	0.2609	3	2.25272	0.3017	3.47	1.0582	0.5826	2.30543	0.06957	0.00543	2.1995
2 1/2	0.4555	3.64	0.2500	2	2.70391	0.4337	3.47	1.5712	0.8875	2.77500	0.10000	0.00781	2.6195
3	0.4340	3.47	0.2500	2	3.32500	0.4337	3.47	1.6337	0.9500	3.40000	0.10000	0.00781	3.2406
3 1/2	0.4290	3.43	0.2500	2	3.82188	0.4337	3.47	1.6837	1.0000	3.90000	0.10000	0.00781	3.7375
4	0.4560	3.65	0.2500	2	4.31875	0.4337	3.47	1.7337	1.0500	4.40000	0.10000	0.00781	4.2344
5	0.4693	3.75	0.2500	2	5.37511	0.4337	3.47	1.8400	1.1563	5.46300	0.10000	0.00781	5.2907
6	0.5545	4.44	0.2500	2	6.43047	0.4337	3.47	1.9462	1.2625	6.52500	0.10000	0.00781	6.3461

Appendix B. Basic Dimensions for Pipe Threads

This information is selected from the International Standard Pipe Threads ISO 7-1 1994

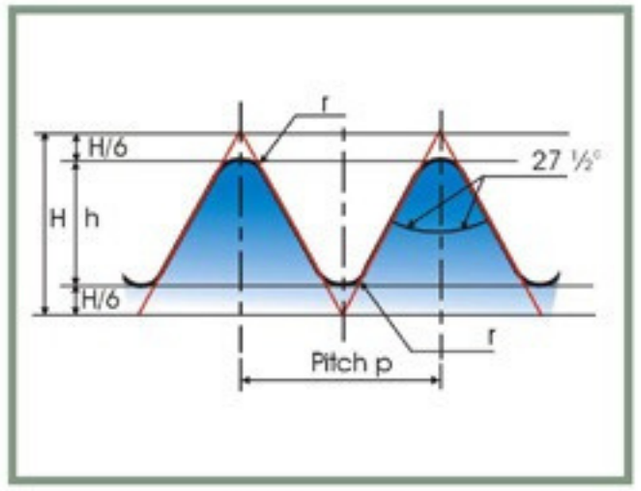

Fig 1 parallel Thread Fig 2 (Taper)
H = 0.960491 x p H
h = 0.640327 x p h
r = 0.137329 x p r

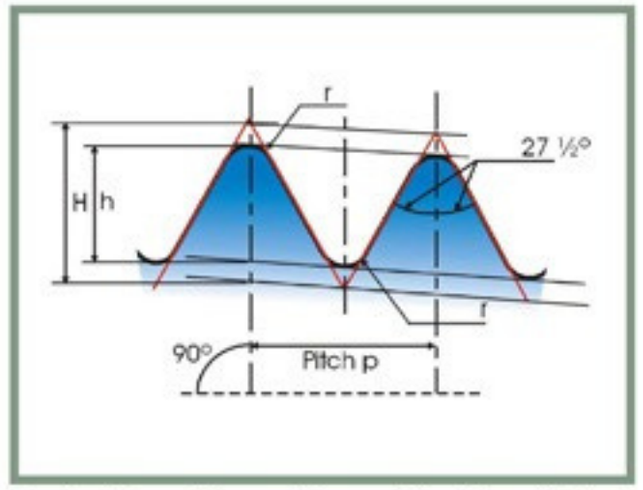

Fig. 3 Taper Thread (Taper 1 in 16 on dia.)
= 0.960237 x p (Shown exaggerated
= 0.640327 x p in diagram)
= 0.137278 x p Axis of screw

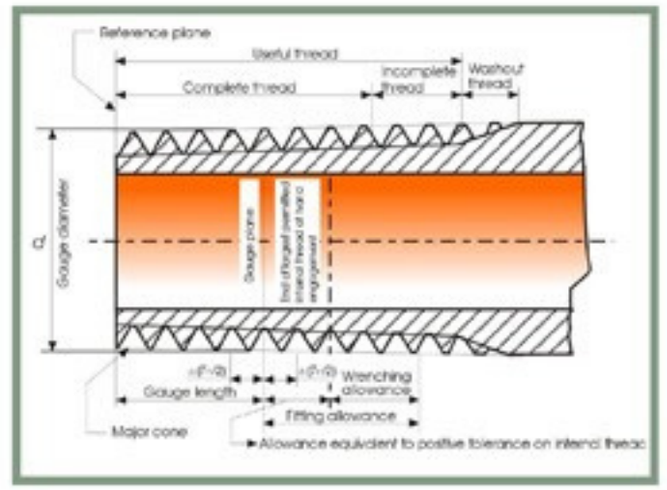

Designation of thread size	Number of threads in 25.4 mm.	Pitch	Height (gauge diameter)	Diameters at gauge plane			Gauge length (external thread)					Tolerance on position of gauge plame on internal thread		Length of useful external thread not less than			Fitting allowance		Diametral tolerance1 on parallel internal threads
				Major (gauge diameter)	Pitch	Minor	Nominal	Tolerance $\pm T_1/2$		max.	min.	Tolerance . $T_2/2$		For nominal gauge length	For maximum gauge length	For minimum gauge length			
								2)	Turns of thread			2)	Turns of thread				2)	Turns of thread	
		P	h	d	d_2	d_1													
1/8	28	0.907	0.581	9.728	9.147	8.566	4.0	0.9	1	4.9	3.1	1.1	1 ¼	6.5	7.4	5.6	2.5	2 3/4	±0.071
1/4	19	1.337	0.856	13.157	12.301	11.445	6.0	1.3	1	7.3	4.7	1.7	1 ¼	9.7	11.0	8.4	3.7	2 3/4	±0.104
3/8	19	1.337	0.856	16.662	15.806	14.950	6.4	1.3	1	7.7	5.1	1.7	1 ¼	10.1	11.4	8.8	3.7	2 3/4	±0.104
1/2	14	1.814	1.162	20.955	19.793	18.631	8.2	1.8	1	10.0	6.4	2.3	1 ¼	13.2	15.0	11.4	5.0	2 3/4	±0.142
3/4	14	1.814	1.162	26.441	25.279	24.117	9.5	1.8	1	11.3	7.7	2.3	1 ¼	14.5	16.3	12.7	5.0	2 3/4	±0.142
1	11	2.309	1.479	33.249	31.770	30.291	10.4	2.3	1	12.7	8.1	2.9	1 ¼	16.8	19.1	14.5	6.4	2 3/4	±0.180
1 1/4	11	2.309	1.479	41.910	40.431	38.952	12.7	2.3	1	15.0	10.4	2.9	1 ¼	19.1	21.4	16.8	6.4	2 3/4	±0.180
1 1/2	11	2.309	1.479	47.803	46.324	44.845	12.7	2.3	1	15.0	10.4	2.9	1 ¼	19.1	21.4	16.8	6.4	2 3/4	±0.180
2	11	2.309	1.479	59.614	58.135	56.656	15.9	2.3	1	18.2	13.6	2.9	1 ¼	23.4	25.7	21.1	7.5	3 3/4	±0.180
2 1/2	11	2.309	1.479	75.184	73.705	72.226	17.5	3.5	1 ½	21.0	14.0	3.5	1 ½	26.7	30.2	23.2	9.2	4	±0.216
3	11	2.309	1.479	87.884	86.405	84.926	20.6	3.5	1 ½	24.1	17.1	3.5	1 ½	29.8	33.3	26.3	9.2	4	±0.216
4	11	2.309	1.479	113.030	111.551	110.072	25.4	3.5	1 ½	28.9	21.9	3.5	1 ½	35.8	39.3	32.3	10.4	4 1/2	±0.216
5	11	2.309	1.479	138.430	136.951	135.472	28.6	3.5	1 ½	32.1	25.1	3.5	1 ½	40.1	43.6	36.6	11.5	5	±0.216
6	11	2.309	1.479	163.830	162.351	160.872	28.6	3.5	1 ½	32.1	25.1	3.5	1 ½	40.1	43.6	36.6	11.5	5	±0.216

BAO TIN STEEL CO., LTD
BTS
BAO TIN STEEL
YOUR TRUST OUR SUCCESS

YOUR TRUST OUR SUCCESS
BTS
BAO TIN STEEL
BAO TIN STEEL CO., LTD

MASTER BOX

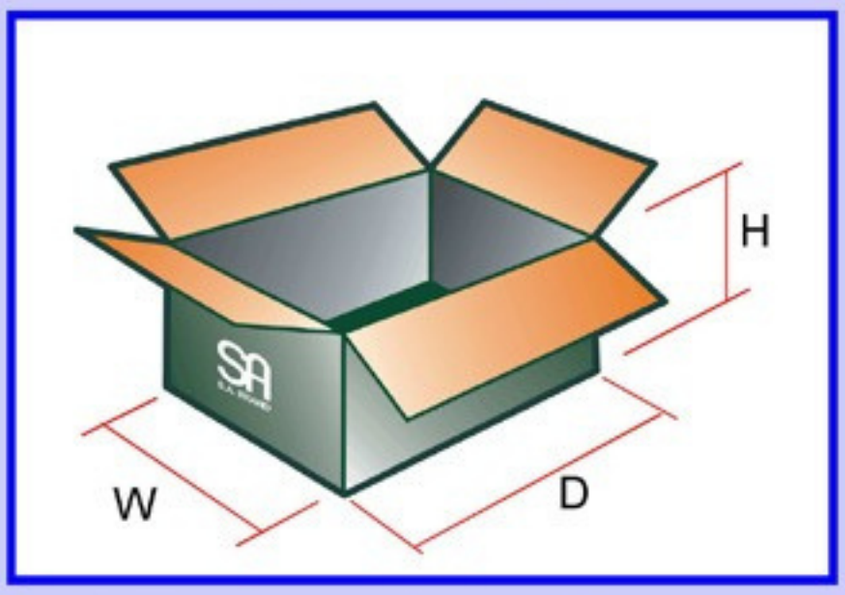

SIZE WxDxH 10 x 13 x 9 3/8"
PAPER A185/ 150 BC

Appendix E.

Metric System Table with English Equivalents

In.		mm.	In.		mm.
1/8	=	4	1 1/2	=	40
1/4	=	8	2	=	50
3/8	=	10	2 1/2	=	65
1/2	=	15	3	=	80
3/4	=	20	4	=	100
1	=	25	5	=	125
1 1/4	=	32	6	=	150

INNER BOX

B2

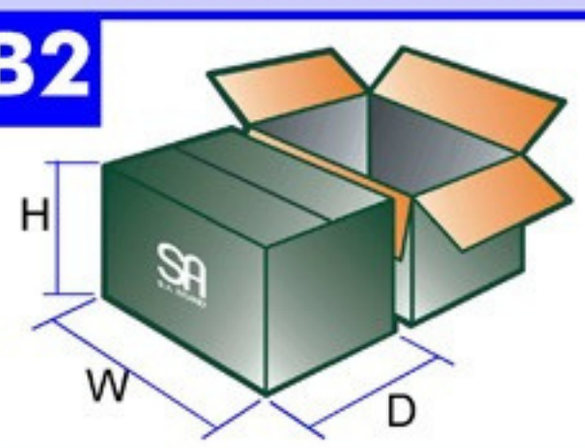

SIZE WxDxH 6 1/4 x 9 5/8 x 8 1/2"
PAPER AS125/ AS125 C

B3

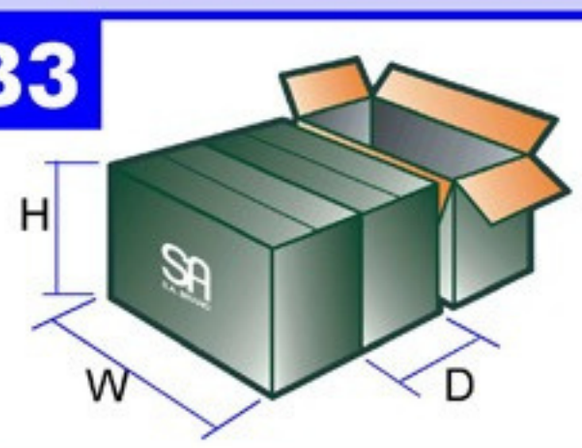

SIZE WxDxH 4 x 9 7/16 x 8 1/2"
PAPER AS125/ AS125 C

B4

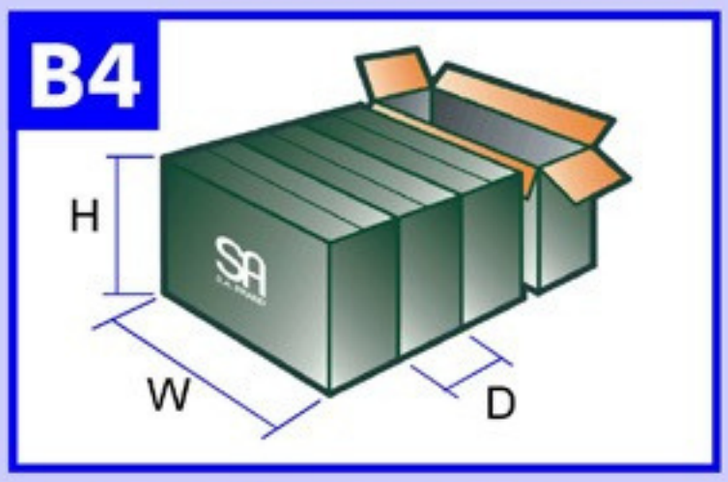

SIZE WxDxH 4 5/8 x 6 1/8 x 8 1/2"
PAPER AS125/ AS125 C

B6

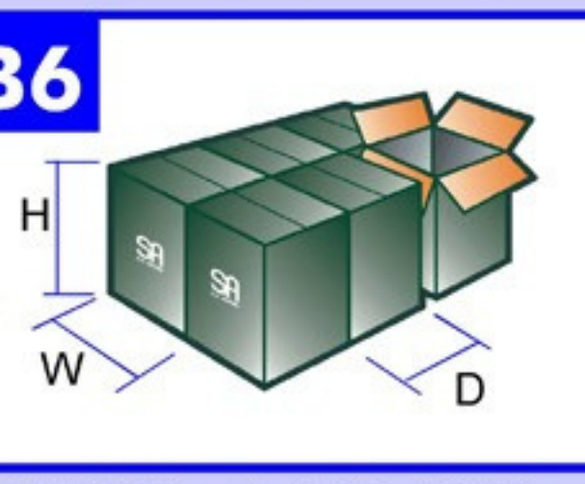

SIZE WxDxH 4 x 4 5/8 x 8 1/2"
PAPER AS125/ AS125 C

B8

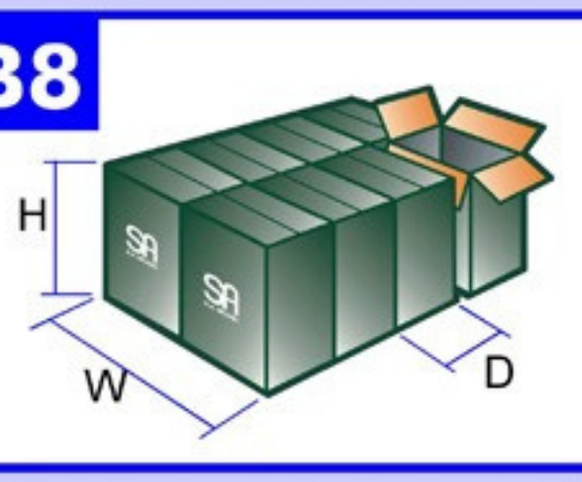

SIZE WxDxH 4 5/8 x 6 1/8 x 4 1/8"
PAPER AS125/ AS125 C

B12

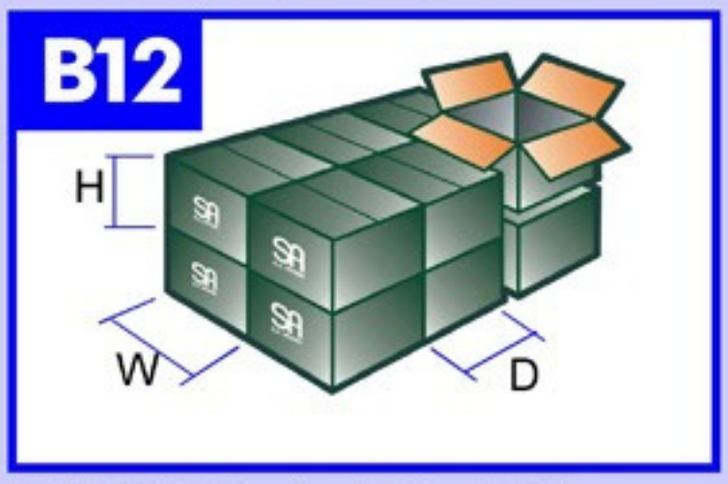

SIZE WxDxH 4 x 4 5/8 x 4 1/8"
PAPER AS125/ AS125 C

PALLET

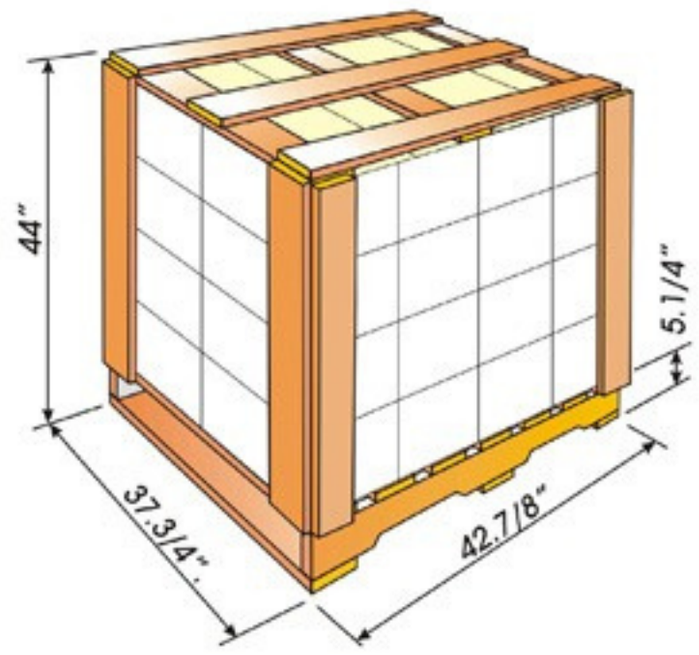

SA pallet Type A (44 Cartons)

Wooden Pallet Dimension 37.3/4" x 42.7/8" x 5.1/4"
Pallet Packing Dimension 37.3/4" x 42.7/8" x 44"

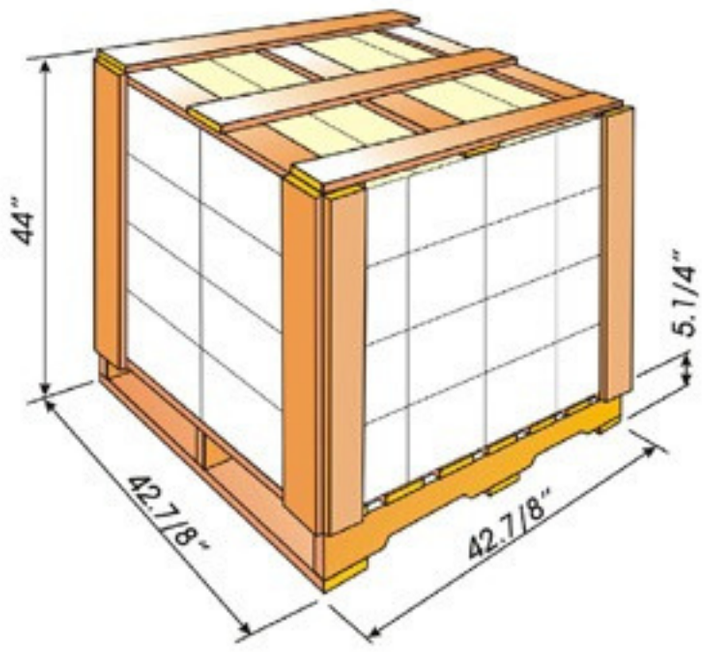

SA pallet Type B (48 Cartons)

Wooden Pallet Dimension 42.7/8" x 42.7/8" x 5.1/4"
Pallet Packing Dimension 42.7/8" x 42.7/8" x 44"

CÔNG TY TNHH THÉP BẢO TÍN

Địa chỉ: 551/156 Lê Văn Khương, P. Hiệp Thành, Quận 12, TP.HCM
Điện thoại: 028 6259 3033 Hotline: 0932 059 176 **MST: 0311458762**
Email: kinhdoanh@thepbaotin.com Website: www.thepbaotin.com

BAO TIN STEEL CO., LTD

ANSI American National Standards Institute
ASTM STANDARDS INTERNATIONAL
BSI BRITISH STANDARD
Canadian Standards Association CSA B51-95
The American Society of Mechanical Engineers
ISO INTERNATIONAL STANDARD
DIN DEUTSCHE NORM
JIS JAPANESE INDUSTRIAL STANDARD

S.A BRAND

SIAM FITTINGS CO.,LTD.

100/1 Moo 2, Settakit 1 Road, Omnoi, Krathumban, Samutsakorn, Thailand, 74130
Tel. +66 (0) 2810 0832-5, Fax. +66 (0) 2429 1538, Email :contact@siamfittings.th.com
www.siamfittings.th.com

Công ty TNHH Thép Bảo Tín
Bao Tin Steel Co., Ltd

THÉP BẢO TÍN

NHÀ PHÂN PHỐI SẢN PHẨM PHỤ KIỆN REN SIAM CHÍNH HÃNG



Nhập khẩu và cung cấp
chuyên nghiệp các sản phẩm về thép
Professional import and supply of steel products



Thành lập từ năm 2012, trải qua nhiều năm xây dựng và phát triển, Thép Bảo Tín đã trở thành một trong những nhà cung cấp các sản phẩm về thép và phụ kiện nối ống thép hàng đầu tại Việt Nam, Campuchia. Thép Bảo Tín luôn xây dựng thương hiệu BTS bằng sự uy tín tuyệt đối, phong cách phục vụ khách hàng chuyên nghiệp, tốc độ cao. Luôn chú trọng đầu tư hệ thống quản lý và không ngừng nâng cao trình độ chuyên môn của đội ngũ nhân sự để ngày càng phát triển vị thế và hình ảnh của mình trên thị trường thép Việt Nam và khu vực.

Chúng tôi luôn mong muốn được phục vụ Quý khách hàng tốt nhất có thể bằng tất cả sự nhiệt huyết và đam mê của mình, để Thép Bảo Tín sẽ trở thành lựa chọn hàng đầu của Quý vị khi có nhu cầu sử dụng các sản phẩm về thép, phụ kiện mà chúng tôi đang cung cấp.

Established in 2012, through many years of construction and development, Bao Tin Steel has become one of the leading suppliers of steel products and steel pipe fittings in Vietnam and Cambodia. Bao Tin Steel has always built the BTS Brand with prestige and professional customer service, and high speed. Always focus on investing in the management system and constantly improve the staff's professional qualifications to develop further its position and image in the steel market in Vietnam and the region.

We always want to serve our customers the best we can with all our enthusiasm and passion, so Bao Tin Steel will become your first choice when we need to use our products. I, about steel, accessories that we are providing.

BAO TIN STEEL

CÁC DỰ ÁN ĐÃ CUNG CẤP VẬT TƯ

PROJECTS THAT HAVE PROVIDED MATERIALS

- **TRỤ SỞ CỤC THUẾ TP.HCM (HO CHI MINH CITY TAX DEPARTMENT)**
  Cung cấp ống thép mạ kẽm, vật tư PCCC (galv. Steel pipe, system of fire)
- **TRỤ SỞ CỤC THUẾ QUẬN TÂN PHÚ (TAX OFFICE OF TAN PHU DISTRICT)**
  Cung cấp ống thép mạ kẽm, vật tư PCCC (galv. Steel pipe, system of fire)
- **TÒA NHÀ HƯNG PHÁT – SỐ 2 LÊ VĂN LƯƠNG – QUẬN 7 – TP.HCM (HUNG PHAT BUILDING)**
  Cung cấp ống thép và phụ kiện, vật tư PCCC (steel pipe & fittings, system of fire, ect.)
- **NHÀ MÁY XỬ LÝ NƯỚC THẢI PHƯỚC HIỆP – CỦ CHI – TP.HCM (PHUOC HIEP WASTEWATER TREATMENT PLANT, CU CHI DISTRICT, HCMC)**
  Cung cấp thép ống, thép hình U I V H, thép tấm, tôn mạ màu, phụ kiện đường ống...
  (Large steel pipe, shape steel U I V H, steel plate, zinc, steel pipe fittings, ect.)
- **KÝ TÚC XÁ ĐẠI HỌC QUỐC GIA TP.HCM (KHU B) – DĨ AN – BÌNH DƯƠNG (DORMITORY OF VIETNAM NATIONAL UNIVERSITY HO CHI MINH CITY (ZONE B) - DI AN CITY, BINH DUONG)**
  Cung cấp hệ thống ống cứu hỏa, vật tư hệ thống PCCC, nước sinh hoạt...
  (Steel pipe and fittings used for fire system, ect.)
- **NHÀ MÁY FORMOSA – NHƠN TRẠCH – ĐỒNG NAI (FORMOSA FACTORY – NHON TRACH DISTRICT, DONG NAI)**
  Cung cấp ống thép đúc và phụ kiện, thép tấm, thép hình các loại...
  (Seamless steel pipe and fittings, steel plate, shape steel, ect.)
- **CÔNG TRÌNH ĐƯỜNG CAO TỐC TP.HCM – LONG THÀNH – DẦU GIÂY (HIGHWAY PROJECT HO CHI MINH CITY - LONG THANH - DAU GIAY)**
  Cung cấp ống thép siêu âm và phụ kiện (ultrasonic steel pipe & fittings)
- **CÔNG TRÌNH ĐƯỜNG DÂY 500KV DUYÊN HẢI – MỎ CÀY (500KV DUYEN HAI – MO CAY POWER GRID PROJECT)**
  Cung cấp ống thép siêu âm và phụ kiện (ultrasonic steel pipe & fittings)
- **NHÀ MÁY TÔN NAM KIM – BÌNH DƯƠNG (NAM KIM STEEL SHEET FACTORY - BINH DUONG)**
  Cung cấp ống thép đúc, ống thép cỡ lớn, thép tấm, thép hình các loại...
  (Seamless steel pipe, large steel pipe, steel plate, shape steel, ect.)
- **TUYẾN METRO SỐ 1 BẾN THÀNH – SUỐI TIÊN (METRO LINE 1 BEN THANH - SUOI TIEN)**
  Cung cấp ống thép siêu âm và phụ kiện (ultrasonic steel pipe & fittings)
- **DỰ ÁN NHÀ MÁY NHIỆT ĐIỆN BOT VÂN PHONG 1 (VAN PHONG 1 BOT THERMAL POWER PLANT PROJECT)**
  Cung cấp các vật tư ống thép, mặt bích, van, co, tê nối ống, ...
  (Supply of steel pipes, flanges, valve, elbow, tee, ...)
- **DỰ ÁN XÂY DỰNG MỚI BỆNH VIỆN ĐA KHOA THỦ ĐỨC (THE NEW CONSTRUCTION PROJECT OF THU DUC AREA GENERAL HOSPITAL)**
  Cung cấp ống thép mạ kẽm: DN25 ~ DN300, sản phẩm van công nghiệp, các thiết bị PCCC chuyên dụng, các phụ kiện nối ống thép
  (Supply galvanized steel pipe: DN25 ~ DN300, industrial valves, Fire Safety Equipment, steel pipe fittings)

CÁC DỰ ÁN ĐÃ CUNG CẤP VẬT TƯ

PROJECTS THAT HAVE PROVIDED MATERIALS

• NHÀ MÁY THUỐC LÁ KHATOCO KHÁNH HOÀ (CỤM CÔNG NGHIỆP TRẢNG É 1)
(KHATOCO KHANH HOA TOBACCO FACTORY (TRANG E INDUSTRIAL CLUSTER 1)

Cung cấp ống thép chữa cháy, van chữa cháy, vật tư PCCC, ...
(Supply fire-fighting steel pipes, fire valves, and fire protection materials, ...)

• NHÀ MÁY SẢN XUẤT SP NHỰA NINGBO CHANGYA (VN) GĐ 3 (KCN THÀNH THÀNH CÔNG, TRẢNG BÀNG, TÂY NINH)
(NINGBO CHANGYA PLASTIC PRODUCTS FACTORY (VN) STAGE 3 (THANH CONG INDUSTRIAL PARK, TRANG BANG, TAY NINH)

Cung cấp ống thép chữa cháy, van chữa cháy, vật tư PCCC, ...
(Supply fire-fighting steel pipes, fire valves, and fire protection materials, ...)

• GÓI THẦU XL-05 THI CÔNG XÂY DỰNG ĐOẠN KM180 - KM200 THUỘC DỰ ÁN TĂNG CƯỜNG KẾT NỐI GIAO THÔNG KV TÂY NGUYÊN, TỈNH GIA LAI
(PACKAGE XL-05 FOR CONSTRUCTION OF THE KM180 - KM200 SECTION OF THE PROJECT TO ENHANCE TRAFFIC CONNECTION IN THE CENTRAL HIGHLANDS, GIA LAI PROVINCE)

Cung cấp ống thép chữa cháy, van chữa cháy, vật tư PCCC, ...
(Supply fire-fighting steel pipes, fire valves, and fire protection materials, ...)

• NHÀ MÁY XỬ LÝ NƯỚC TỈNH SVAY RIENG - CAMBODIA
(SVAY RIENG PROVINCE WATER TREATMENT PLANT – CAMBODIA)

Cung ứng vật tư Van công nghiệp, ống thép mạ kẽm nhúng nóng, ống inox, ...
(Supply all kinds of industrial valves, hot-dip galvanized steel pipes, stainless steel pipes,...)

• DỰ ÁN SÂN VẬN ĐỘNG QUỐC GIA CAMBODIA
(CAMBODIA NATIONAL STADIUM PROJECT)

Cung cấp vật tư ống hộp, van công nghiệp,....
(Supplying materials for pipe & tube, valves, ...)

• DỰ ÁN NHÀ THỜ GIÁO XỨ AN HỘI - NINH KIỀU, CẦN THƠ
(AN HOI PARISH CHURCH PROJECT – NINH KIEU DISTRICT, CAN THO)

Cung cấp thép hộp mạ kẽm Hòa Phát 40x40x1.4, khối lượng 3033 Kg; thép hộp mạ kẽm Hòa Phát 25x25x1.4, khối lượng 2799 Kg và thép hộp mạ kẽm Hòa Phát 20x20x1.4, khối lượng 1449 Kg.
(Supplying galvanized steel tube Hoa Phat 40x40x1.4, weight 3033 Kg; Hoa Phat galvanized steel tube 25x25x1.4, weight 2799 Kg and Hoa Phat galvanized steel tube 20x20x1.4, weight 1449 Kg).

• DỰ ÁN NHÀ MÁY NHIỆT ĐIỆN VŨNG ÁNG 2 - HÀ TĨNH
(VUNG ANG 2 THERMAL POWER PLANT PROJECT, HA TINH PROVINCE)

Cung cấp các vật tư ống thép đúc mạ kẽm, mặt bích mạ kẽm, van công nghiệp, co hàn mạ kẽm, tê hàn mạ kẽm, măng sông mạ kẽm nối ống, ...
(Supplying galvanized steel pipe materials, galvanized flanges, valves, galvanized elbow fittings, galvanized tee, coupling galvanized, ...)

• VÀ RẤT NHIỀU CÁC CÔNG TRÌNH, DỰ ÁN LỚN NHỎ TẠI VIỆT NAM VÀ CAMPUCHIA
(AND A LOT OF BIG PROJECTS IN VIETNAM AND CAMBODIA)

BAO TIN STEEL

Thay lời toàn bộ đội ngũ nhân sự công ty, xin gửi lời cảm ơn chân thành nhất tới những Quý khách hàng và Đối tác – những người đã yêu mến và tin tưởng Thép Bảo Tín suốt thời gian qua.

On behalf of the entire company staff, we would like to express our sincerest thanks to our customers and partners - Who have loved and trusted Bao Tin Steel all this time.



CÔNG TY TNHH THÉP BẢO TÍN

Bao Tin Steel Co.,Ltd

Trụ sở chính | Headquarters

551/156 Lê Văn Khương, P. Hiệp Thành, Quận 12, TP.HCM, Hồ Chí Minh City, Việt Nam

551/156 Le Van Khuong, Ward Hiep Thanh, 12 District, Ho Chi Minh city, Viet Nam

Hotline: 093 205 91 76 **Email:** kinhdoanh@thepbaotin.com **Website:** thepbaotin.com

Chi Nhánh Miền Bắc | North Branch

KCN Yên Phong, xã Đông Phong, huyện Yên Phong, tỉnh Bắc Ninh

Yen Phong Industrial Park, Dong Phong Commune, Yen Phong District, Bac Ninh Province

Hotline: 0938 784 176 - 0903 321 176 **Email:** mb@thepbaotin.com

Chi Nhánh Cambodia | Cambodia branch

252 National Road 1, Prek Eng, Chbar Ampov, Phnom Penh, Cambodia

Mobile: (+855): 9 6869 6789 – 6869 6789 **Email:** sales@baotinsteel.com

